RIDEM & Development Plan Review Submission

Frontier Road Solar

15 Frontier Road
Hopkinton, RI

Assessor's Plat 7 Lot 62, 62A, & 63

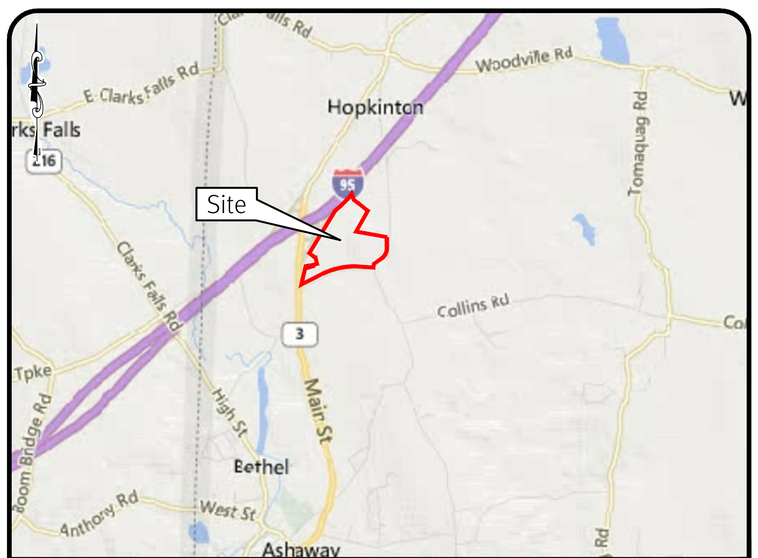

Location Map Not to Scale

Sheet Index

1 Cover Sheet
2 Aerial Half Mile Radius & USGS Map
3 General Notes and Legend
4 ALTA NSPS Land Title Survey
5 ALTA NSPS Land Title Survey
6 Existing Analysis Plan
7 Overall SESC Plan
8 Overall Site Layout Plan
9 Site Plan - 1
10 Site Plan - 2
11 Site Plan - 3
12 Site Plan - 4
13 Detail Sheet - 1
14 Detail Sheet - 2

DiPrete Engineering
Two Stafford Court Cranston, RI 02920
tel 401-943-1000 fax 401-464-6006 www.diprete-eng.com
Boston • Providence • Newport

BRIAN C. GIROUX
REGISTERED PROFESSIONAL ENGINEER CIVIL

This plan set must not be used for construction purposes unless stamped 'Issued for Construction' and stamped by a registered Professional Engineer of DiPrete Engineering.

DiPrete Engineering only warrants plans on a DiPrete Engineering title block stamped by registered Professional Engineer of DiPrete Engineering. DiPrete Engineering does not warrant plans by any other party.

The contractor is responsible for all of the means, methods, safety precautions and requirements, and OSHA conformance in the implementation of this plan and design.

Existing utilities shown on this plan are approximate only. DiPrete Engineering assumes no responsibility for damages incurred due to locations of existing utilities. See 'Utility Note' on sheet 3.

No.	Date	Description	By:
9	07/07/2020	Crossman Peer Review Comment Revisions	J.L.S.
8	06/26/2020	Crossman Peer Review Comment Revisions	B.C.G.
7	06/23/2020	Crossman Peer Review Comment Revisions	J.L.S.
6	06/18/2020	Crossman Peer Review Comment Revisions	J.L.S.
5	06/04/2020	Crossman Peer Review Comment Revisions	J.L.S.
4	05/21/2020	Crossman Peer Review Comment Revisions	J.L.S.
3	05/01/2020	Updated Abutters	C.M.R.
2	04/24/2020	Crossman Peer Review Comment Revisions	J.L.S.
1	03/31/2020	RIDEM/Development Plan Review Modifications	N.D.K.
0	03/27/2020	RIDEM Preliminary Determination Submission	J.L.S.

Drawn By: J.L.S. Checked By: D.R.N.

Cover Sheet
Frontier Road Solar
Assessor's Plat 7 Lots 62, 62A & 63
Hopkinton, Rhode Island

Prepared for
Revity Energy, LLC
117 Metro Center Blvd, Warwick, Rhode Island 02886

DE Job No: 2437-021 Copyright 2020 by DiPrete Engineering Associates, Inc.

z:\demain\projects\2437-021 frontier road solar\autocad drawings\2437-021-cvar.dwg Plotted: 7/7/2020

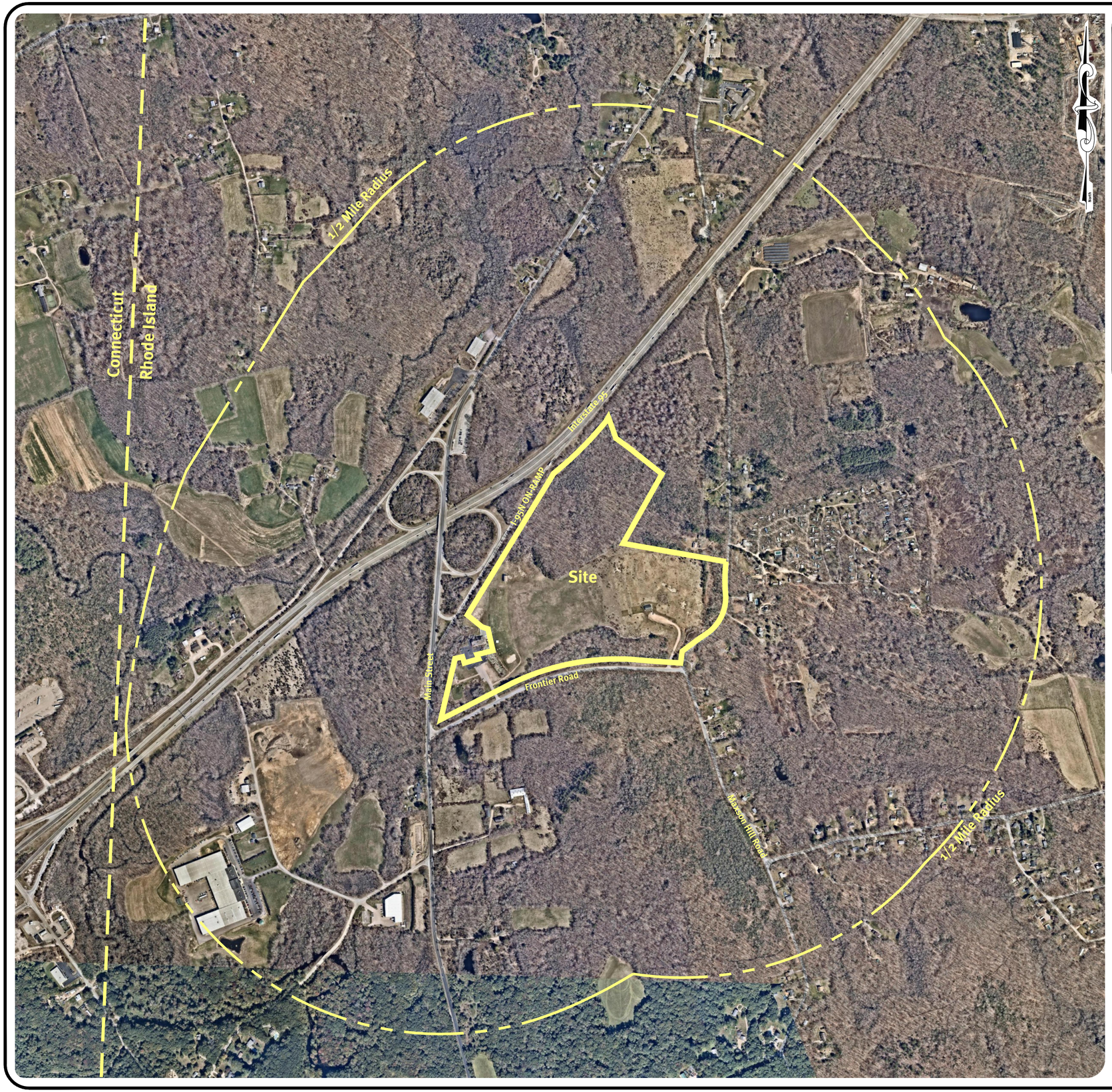

Photo Obtained from RIGIS/Near Map. Date of Photography 09/29/2019.

Scale: 1"=400'

0 200' 400' 800'

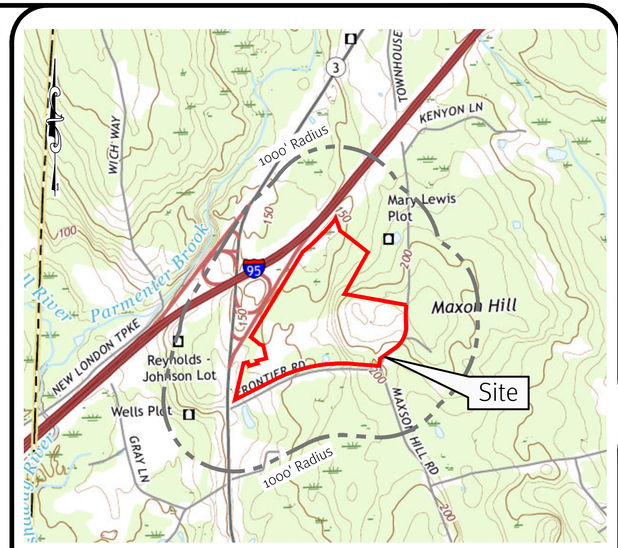

USGS Map Scale: 1"=1000'

DiPrete Engineering
Two Stafford Court Cranston, RI 02920
tel 401-943-1000 fax 401-464-6006 www.diprete-eng.com
Boston • Providence • Newport

BRIAN C. GIROUX
No. 8341
7/15/2020
REGISTERED PROFESSIONAL ENGINEER CIVIL

This plan set must not be used for construction purposes unless stamped Issued for Construction and stamped by a registered Professional Engineer of DiPrete Engineering.

DiPrete Engineering only warrants plans on a DiPrete Engineering title block stamped by registered Professional Engineer of DiPrete Engineering. DiPrete Engineering does not warrant plans by any other party.

The contractor is responsible for all the means, methods, safety precautions and requirements, and OSHA conformance in the implementation of this plan and design.

Existing utilities shown on this plan are approximate only. DiPrete Engineering does not guarantee the accuracy or completeness of locations of existing utilities. See 'Utility Note' on sheet 3.

No.	Date	Description	By:
9	07/07/2020	Consistent Peer Review Comment Revisions	J.L.S.
8	07/01/2020	Consistent Peer Review Comment Revisions	B.C.G.
7	06/30/2020	Consistent Peer Review Comment Revisions	J.L.S.
6	06/18/2020	Consistent Peer Review Comment Revisions	J.L.S.
5	06/04/2020	Consistent Peer Review Comment Revisions	J.L.S.
4	05/01/2020	Updated Abutters	K.R.K.
3	04/24/2020	Consistent Peer Review Comment Revisions	K.R.K.
2	03/23/2020	RIDEM Peer Review Plan Review Modifications	N.S.K.
0	01/27/2020	RIDEM Preliminary Determination Submission	J.L.S.

Drawn By: J.L.S. Checked By: D.R.N.

Aerial Half Mile Radius & USGS Map

Frontier Road Solar

Assessor's Plat 7 Lots 62, 62A & 63
Hopkinton, Rhode Island

Prepared For
Revity Energy, LLC
117 Metro Center Blvd, Warwick, Rhode Island 02886

SHEET 2 OF 14

DE Job No: 2437-021 Copyright 2020 by DiPrete Engineering Associates, Inc.

z:\dcmain\projects\2437-021 frontier road solar\autocad drawings\2437-021-cvar.dwg Plotted: 7/7/2020

General Notes:

1. THE SITE IS LOCATED ON THE TOWN OF HOPKINTON ASSESSOR'S PLAT 7 LOTS 62, 62A, AND 63.
2. THE SITE IS APPROXIMATELY 64.4± ACRES AND IS ZONED MANUFACTURING.
3. THE OWNER OF AP 7 LOTS 62, 62A, AND 63 IS:
   HOPKINTON INVESTMENTS LLC
   555 PLEASANT STREET
   ATTLEBORO, MA 02703–2440
4. THIS SITE IS LOCATED IN FEMA FLOOD ZONE X. REFERENCE FEMA FLOOD INSURANCE RATE MAP 44009C0135H, MAP REVISED OCTOBER 19, 2010.

   ZONE X (UNSHADED) – THIS SITE IS LOCATED IN FEMA FLOOD ZONE X. ZONE X ARE AREAS WHERE THERE IS MINIMAL FLOODING.

   ZONE X (SHADED) – THIS SITE IS LOCATED IN FEMA FLOOD ZONE X. ZONE X ARE AREAS OF 0.2% ANNUAL CHANCE OF FLOOD; AREAS OF 1% ANNUAL CHANCE OF FLOOD WITH AVERAGE DEPTHS OF LESS THAN 1 FOOT OR WITH DRAINAGE AREAS LESS THAN 1 SQUARE MILE; AND AREAS PROTECTED BY LEVEES FROM 1% ANNUAL CHANCE FLOOD.
5. THE BOUNDARY LINE AS SHOWN ON THIS PLAN DEPICTS THE RESULTS OF A CLASS I BOUNDARY RETRACEMENT SURVEY AS PERFORMED BY DIPRETE ENGINEERING ASSOCIATES, INC. THIS PLAN IS NOT TO BE CONSTRUED AS A CLASS I BOUNDARY RETRACEMENT SURVEY PLAN AND IS NOT SUITABLE FOR RECORDING AS A CLASS I STANDARD SURVEY PLAN.
6. ALL WORK PERFORMED HEREIN IS TO BE GOVERNED BY CURRENT EDITIONS OF THE RHODE ISLAND STANDARD SPECIFICATION FOR ROAD AND BRIDGE CONSTRUCTION, TOWN OF HOPKINTON STANDARD SPECIFICATIONS AND DETAILS AND SPECIFICATIONS INCLUDED AS PART OF THE DRAWINGS. IN AREAS OF CONFLICT BETWEEN THE DIFFERENT SPECIFICATIONS, THE DESIGN PLANS AND PROJECT SPECIFICATIONS WILL TAKE PRECEDENCE OVER THE GENERAL SPECIFICATIONS AND THE DESIGN ENGINEER WILL INTERPRET THE CONSTRUCTION REQUIREMENT. THE CONTRACTOR IS ADVISED TO SUBMIT A REQUEST FOR INFORMATION (RFI) FOR ANY AREAS OF CONFLICT BEFORE COMMITTING TO CONSTRUCTION.
7. THE SITE IS NOT WITHIN A:
   NATURAL HERITAGE AREAS (RIDEM)
   NARROW RIVER SPECIAL AREA MANAGEMENT PLAN (CRMC)
   SALT PONDS SPECIAL AREA MANAGEMENT PLAN (CRMC)
   GROUNDWATER PROTECTION OVERLAY DISTRICT (TOWN)
8. THE FOLLOWING DOCUMENTS ARE CONSIDERED PART OF THE PROJECT PLANS AND THE CONTRACTOR/ OWNER MUST MAINTAIN THESE DOCUMENTS AS PART OF A FULL PLAN SET:
   - SOIL EROSION AND SEDIMENT CONTROL PLAN (SESC). THE SESC CONTAINS THE FOLLOWING:
     - EROSION CONTROL MEASURES
     - SHORT TERM MAINTENANCE
     - ESTABLISHMENT OF VEGETATIVE COVER
     - CONSTRUCTION POLLUTION PREVENTION
     - SEQUENCE OF CONSTRUCTION
   - STORMWATER OPERATION AND MAINTENANCE PLAN (O&M). THE O&M CONTAINS:
     - LONG TERM MAINTENANCE
     - LONG TERM POLLUTION PREVENTION
9. THIS PLAN SET REFERENCES RIDOT STANDARD DETAILS (DESIGNATED AS RIDOT STD X.X.X.). RIDOT STANDARD DETAILS ARE AVAILABLE FROM RIDOT AND ONLINE AT: HTTP: //WWW.DOT.RI.GOV/BUSINESS/CONTRACTORSANDCONSULTANTS.PHP.
10. THE SITE DOES NOT REQUIRE WATER OR SEWER CONNECTIONS.
11. THE SITE IS PROPOSED TO BE BUILT IN 1 PHASE.
12. SOIL EVALUATIONS WERE COMPLETED BY DIPRETE ENGINEERING ON 11/13/2019.
13. ANY PROPRIETARY PRODUCTS REFERENCED IN THIS PLAN SET ARE REPRESENTATIVE OF THE MINIMUM DESIGN REQUIREMENTS FOR THE PURPOSE IT PROPOSES TO SERVE. ALTERNATIVES TO ANY PROPRIETARY PRODUCT MAY BE SUBMITTED TO THE ENGINEER OF RECORD FOR CONSIDERATION, WHICH MUST BE ACCOMPANIED BY APPROPRIATE SPECIFICATION SHEETS/ DESIGN CALCULATIONS THAT DEMONSTRATE THE ALTERNATIVE(S) MEET THE MINIMUM DESIGN PARAMETERS OF THE PRODUCT SHOWN ON THE PLANS. NO ALTERNATIVES MAY BE USED WITHOUT THE WRITTEN APPROVAL OF THE ENGINEER OF RECORD.
14. PROPOSED CONCEPTUAL PUMP HOUSE WILL BE ONLY NEEDED IF RESTAURANT USE IS TO REMAIN ON ABUTTING LOT. IF RESTAURANT US IS ABANDONED A NEW PRIVATE WELL WILL BE INSTALLED AND THE PUBLIC WELL AND ASSOCIATED WATER LINES WITH BE ABANDONED AND REMOVED.

Soil Information:

(REFERENCE: SOIL MAPPING OBTAINED FROM RIGIS. SOIL GEOGRAPHIC DATA DEVELOPED BY THE RHODE ISLAND SOIL SURVEY PROGRAM IN PARTNERSHIP WITH THE NATIONAL COOPERATIVE SOIL SURVEY)

SOIL NAME	DESCRIPTION
CaC	CANTON–CHARLTON–ROCK OUTCROP COMPLEX, 3 TO 15 PERCENT SLOPES
CdB	CANTON AND CHARLTON FINE SANDY LOAMS, 3 TO 8 PERCENT SLOPES
CkC	CANTON AND CHARLTON EXTREMELY STONY FINE SANDY LOAMS, 3 TO 15
Rf LOAMS	RIDGEBURY, WHITMAN, AND LEICESTER EXTREMELY STONY FINE SANDY
SuB	SUTTON VERY STONY FINE SANDY LOAM, 0 TO 8 PERCENT SLOPES
UD	UDORTHENTS–URBAN LAND COMPLEX
WoB	WOODBRIDGE VERY STONY FINE SANDY LOAM, 0 TO 8 PERCENT SLOPES

Soil Erosion and Sedimentation Control Notes:

1. THE CONTRACTOR IS RESPONSIBLE FOR ALL SOIL EROSION AND SEDIMENT CONTROL ON SITE WHICH MUST BE CONSTRUCTED AND MAINTAINED IN ACCORDANCE WITH THE APPLICABLE REGULATIONS AND AUTHORITY HAVING JURISDICTION. THE CONTRACTOR IS TO NOTIFY THE DESIGN ENGINEER, THE DIRECTOR OF PUBLIC WORKS, THE TOWN ENGINEER, AND RHODE ISLAND DEPARTMENT OF ENVIRONMENTAL MANAGEMENT AT LEAST 48 HOURS PRIOR TO THE START OF CONSTRUCTION.
2. ALL EROSION CONTROL, TEMPORARY SWALES AND TEMPORARY SEDIMENT TRAPS. TO BE INSTALLED PER THE RHODE ISLAND SOIL EROSION AND SEDIMENTATION CONTROL LATEST EDITION AND THE SOIL EROSION SEDIMENTATION CONTROL PLAN (SESC).
3. TEMPORARY SWALES ARE TO BE USED TO CONTROL RUNOFF DURING CONSTRUCTION OF THE PROPOSED ROADWAY. TEMPORARY SWALES TO BE VEGETATED AFTER CONSTRUCTION. EROSION CONTROL MATS ARE TO BE INSTALLED, IF NECESSARY, TO PREVENT EROSION AND SUPPORT VEGETATION. AFTER CONSTRUCTION IS COMPLETE AND TRIBUTARY AREAS TO THE SWALES HAVE BEEN STABILIZED, THE TEMPORARY SWALES ARE TO BE CLEARED AND FINAL DESIGN, INCLUDING INSTALLATION OF THE GRASS SWALE TO BE PER THE DESIGN PLANS.
4. ONCE THE SEDIMENT TRAPS ARE NO LONGER REQUIRED AND ALL TRIBUTARY AREAS HAVE BEEN STABILIZED, THE TEMPORARY SEDIMENTATION TRAP IS TO BE CLEANED AND BROUGHT TO FINAL DESIGN GRADES.
5. FOR SEQUENCE OF CONSTRUCTION, PROJECT PHASING AND CONSTRUCTION PHASING SEE SESC PLAN.
6. CONTRACTOR MAY MODIFY SEQUENCE OF CONSTRUCTION WITH APPROVAL FROM DESIGN ENGINEER AND OWNER.
7. IF CONCRETE TRUCKS ARE WASHED OUT ON SITE, ALL WASHOUT MUST BE COMPLETED IN THE DESIGNATED CONCRETE WASHOUT AREA.

Demolition Notes:

1. CONTRACTOR TO OBTAIN ALL FEDERAL, STATE, AND MUNICIPAL APPROVALS PRIOR TO THE START OF CONSTRUCTION.
2. CONTRACTOR TO PERFORM DAILY SWEEPING AT CONSTRUCTION ENTRANCE DURING DEMOLITION AND CONSTRUCTION TO MINIMIZE SEDIMENTS ON EXTERNAL STREETS.
3. ANY EXISTING BUILDING(S) AND PROPERTY PROPOSED TO REMAIN WHICH ARE DAMAGED BY THE CONTRACTOR MUST BE REPAIRED BY THE CONTRACTOR AT NO ADDITIONAL COST TO THE OWNER.
4. CONTRACTOR IS RESPONSIBLE FOR REMOVING AND LEGALLY DISPOSING (R&D) ALL MATERIALS INDICATED ON THE PLANS UNLESS SPECIFIED OTHERWISE HERE IN. R&D MATERIALS MUST INCLUDE BUT ARE NOT LIMITED TO PAVEMENT, GRAVEL, CATCH BASINS, MANHOLES, GRATES/FRAMES/COVERS, AND ANY EXCESS SOIL THAT IS NOT INCORPORATED INTO THE WORK.
5. IN ADDITION TO THOSE AREAS SPECIFICALLY DESIGNATED ON THE PLANS, ALL DISTURBED AREAS INCLUDING THE CONTRACTOR'S STOCKPILE AND STAGING AREAS WITHIN THE LIMIT OF WORK MUST BE RESTORED TO MATCH THE DESIGN PLANS.
6. CONTRACTOR MUST DOCUMENT LOCATION OF ALL SUBSURFACE UTILITIES REMAINING IN PLACE AFTER DEMOLITION (ACTIVE AND INACTIVE/ABANDONED). LOCATION MUST BE DOCUMENTED BY FIELD SURVEY OR SWING TIES. COPIES OF LOCATION DOCUMENTATION MUST BE PROVIDED TO THE OWNER FOLLOWING COMPLETION OF DEMOLITION AND PRIOR TO START OF NEW CONSTRUCTION. A MARKER MUST BE INSTALLED TO FINISH GROUND AT ALL INSTALLED CAPS/PLUGS. THE MARKER CAN BE A POST IN CONSTRUCTION AREAS OR PAINTED ON A PERMANENT SURFACE.

Traffic Notes:

1. ALL TRAFFIC CONTROL MUST CONFORM TO THE FEDERAL HIGHWAY ADMINISTRATION (FHWA) MANUAL ON UNIFORM TRAFFIC CONTROL DEVICES (MUTCD) CURRENT EDITION.
2. DURING CONSTRUCTION, TRAFFIC CONES ARE TO BE USED FOR SEPARATION OF ACTIVE TRAFFIC FROM WORK ZONE PER MUTCD REQUIREMENTS.
3. DURING CONSTRUCTION FLAGGERS MUST BE EMPLOYED TO ENSURE SAFETY FOR INTERACTION OF CONSTRUCTION VEHICLES AND ACTIVE TRAFFIC.
4. ALL SIGNS, FLAGGERS, TRAFFIC CONTROL DEVICES, AND TEMPORARY TRAFFIC ZONE ACTIVITIES MUST MEET THE REQUIREMENTS OF THE MANUAL ON UNIFORM TRAFFIC (MUTCD) LATEST EDITION AND SUBSEQUENT ADDENDA.
5. TEMPORARY CONSTRUCTION SIGNS MUST BE MOUNTED ON RIDOT APPROVED SUPPORTS AND MUST BE REMOVED OR COVERED WHEN NOT APPLICABLE.

As-Built Notes:

ALL COMPONENTS OF THE DRAINAGE SYSTEM MUST BE ASBUILT PRIOR TO COVERING. ENGINEER TO BE NOTIFIED PRIOR TO COVERING TO SURVEY ASBUILT LOCATIONS. ENGINEER WILL NOT ACCEPT FIELD MEASUREMENTS FROM THE SITE CONTRACTOR.

Grading and Utility Notes:

1. CONSTRUCTION TO COMMENCE SPRING 2020 OR UPON RECEIPT OF ALL NECESSARY APPROVALS.
2. THE CONTRACTOR MUST COORDINATE WITH ALL OF THE APPROPRIATE UTILITY COMPANIES FOR AGREEMENTS TO SERVICE THE PROPOSED DEVELOPMENT. THIS MUST BE DONE PRIOR TO CONSTRUCTION. NO REPRESENTATIONS ARE MADE BY DIPRETE ENGINEERING THAT UTILITY SERVICE IS AVAILABLE.
3. PRIOR TO START OF CONSTRUCTION, CONTRACTOR MUST VERIFY EXISTING PAVEMENT ELEVATIONS AT INTERFACE WITH PROPOSED PAVEMENTS, AND EXISTING GROUND ELEVATIONS ADJACENT TO DRAINAGE OUTLETS TO ASSURE PROPER TRANSITIONS BETWEEN EXISTING AND PROPOSED FACILITIES. CONTRACTOR MUST NOTIFY DESIGN ENGINEER OF ANY DISCREPANCIES PRIOR TO CONSTRUCTION.
4. ALL PROPOSED UNDERGROUND UTILITIES SERVING THE SITE AND BUILDINGS TO BE COORDINATED WITH OWNER, AND ENGINEER PRIOR TO INSTALLATION.
5. ALL RETAINING WALLS AND STEEP SLOPES ARE SUBJECT TO FINAL STRUCTURAL DESIGN. DIPRETE ENGINEERING IS NOT PROVIDING THE STRUCTURAL DESIGN OF THESE ITEMS. ALL WALLS AND STEEP SLOPES ARE TO BE DESIGNED AND BUILT UNDER THE DIRECTION OF A PROFESSIONAL GEOTECHNICAL ENGINEER AND CERTIFIED TO THE OWNER PRIOR TO THE COMPLETION OF THE PROJECT. SHOP DRAWINGS TO BE SUBMITTED PRIOR TO CONSTRUCTION. FINAL STRUCTURAL DESIGN MUST INCORPORATE THE INTENT OF THE GRADING SHOWN ON THESE PLANS AND ALL WORK MUST BE WITHIN THE LIMIT OF DISTURBANCE SHOWN ON THE PLANS.
6. ALL CUT AND FILL AREAS ARE TO BE DONE UNDER THE DIRECTION OF A PROFESSIONAL GEOTECHNICAL ENGINEER WITH TESTING AND CERTIFICATION TO BE PROVIDED TO THE APPLICANT AT THE COMPLETION OF THE PROJECT. DIPRETE ENGINEERING IS NOT PROVIDING THE FILL SPECIFICATION, GEOTECHNICAL ENGINEERING, STRUCTURAL ENGINEERING SERVICES, OR SUPERVISION AS PART OF THESE DRAWINGS.
7. NO STOCKPILING OF MATERIAL TO BE LOCATED IN THE RIGHT OF WAY AND NO OPEN TRENCHES ARE TO BE LEFT OVERNIGHT.
8. ALL LOAM IN DISTURBED AREAS TO BE STOCKPILED FOR FUTURE USE. ALL STOCKPILED LOAM MUST BE USED AND RE–SPREAD ON–SITE.
9. ALL EXCESS TREES, ROCKS, BOULDERS, AND OTHER REFUSE, MUST BE DISCARDED OFF SITE IN AN ACCEPTABLE MANNER AT AN APPROVED LOCATION. STUMPS MUST BE GROUND ON SITE OR REMOVED.
10. NO STUMP DUMPS ARE PROPOSED ON SITE.

ELECTRIC

PROPOSED ELECTRIC UTILITIES ARE SHOWN SCHEMATICALLY AND ARE PROPOSED TO BE UNDERGROUND. OWNER & CONTRACTOR TO COORDINATE FINAL DESIGN WITH APPROPRIATE UTILITY COMPANIES. ALL WORK TO BE IN ACCORDANCE WITH EACH UTILITY COMPANY'S STANDARDS AND DETAILS AS WELL AS LOCAL AND FEDERAL REGULATIONS. THIS INCLUDES BUT IS NOT LIMITED TO, POLES, TRANSFORMERS, PULL BOXES, CONCRETE PADS, CONCRETE ENCASEMENTS AND CONDUITS. CONNECTION POINTS FOR ELECTRIC UTILITIES, AT THE EXISTING INFRASTRUCTURE, ARE CURRENTLY SHOWN AS UNDERGROUND. THESE MAY BE UNDERGROUND OR OVERHEAD AND WILL BE COORDINATED WITH NATIONAL GRID PRIOR TO CONSTRUCTION.

Abbreviations Legend

ADA	AMERICANS WITH DISABILITY ACT	OHW	OVERHEAD WIRE
AHJ	AUTHORITY HAVING JURISDICTION	PE	POLYETHYLENE
AP	ASSESSOR'S PLAT	PL	PROPERTY LINE
BC	BOTTOM OF CURB	PR	PROPOSED
BT	BOTTOM OF TESTHOLE	PVC	POLYVINYL CHLORIDE
BIT	BITUMINOUS (BERM)	R	RADIUS
BIO	BIORETENTION	R&D	REMOVE AND DISPOSE
BS	BASEMENT SLAB ELEVATION	RCP	REINFORCED CONCRETE PIPE
BW	FINISHED GRADE AT BOTTOM OF WALL	RIHB	RHODE ISLAND HIGHWAY BOUND
CB	CATCH BASIN	RL	ROOF LEADER
(C)	CALCULATED	ROW	RIGHT OF WAY
CL	CENTERLINE	S	SLOPE
(CA)	CHORD ANGLE	SD	SUBDRAIN
CLDIP	CONCRETE LINED DUCTILE IRON PIPE	SED	SEDIMENT FOREBAY
CO	CLEAN OUT	SF	SQUARE FOOT
CONC	CONCRETE	SFL	STATE FREEWAY LINE
(D)	DEED	SFM	SEWER FORCE MAIN
DCB	DOUBLE CATCH BASIN	SG	SLAB ON GRADE ELEVATION
DI	DROP INLET	SHL	STATE HIGHWAY LINE
DMH	DRAINAGE MANHOLE	SMH	SEWER MANHOLE
DP	DETENTION POND	SNDF	SAND FILTER
ELEV	ELEVATION	SS	SIDE SLOPE
EOP	EDGE OF PAVEMENT	STA	STATION
ESC	EROSION AND SEDIMENT CONTROL	TC	TOP OF CURB
EX	EXISTING	TD	TRENCH DRAIN
FES	FLARED END SECTION	TF	TOP OF FOUNDATION
FFE	FINISH FLOOR ELEVATION	TRANS	TRANSITION
GS	GARAGE SLAB ELEVATION	TW	TOP OF WALL (FINISHED GRADE AT TOP OF WALL)
GWT	GROUND WATER TABLE	TYP	TYPICAL
HW	HEADWALL	UDS	UNDERGROUND DETENTION SYSTEM
HC	HIGH CAPACITY CATCH BASIN GRATE	UIS	UNDERGROUND INFILTRATION SYSTEM
HDPE	HIGH DENSITY POLYETHYLENE	UP	UTILITY POLE
ID	INLINE DRAIN	WO	WALKOUT ELEVATION
INV	INVERT	WQ	WATER QUALITY
IP	INFILTRATION POND		
LF	LINEAR FEET		
LOD	LIMIT OF DISTURBANCE		
LP	LIGHT POLE		
(M)	MEASURED		
N/F	NOW OR FORMERLY		

Existing Legend

(AS SHOWN ON PROPOSED PLANS)

NOT ALL ITEMS SHOWN WILL APPEAR ON PLANS

PROPERTY LINE
ASSESSORS LINE
BUILDING
BRUSHLINE
TREELINE
GUARDRAIL
FENCE
RETAINING WALL
STONE WALL
MINOR CONTOUR LINE
MAJOR CONTOUR LINE
WATER LINE
SEWER LINE
SEWER FORCE MAIN
GAS LINE
ELECTRIC LINE
OVERHEAD WIRES
DRAINAGE LINE
SOILS LINES
50' PERIMETER WETLAND
100' RIVERBANK WETLAND
200' RIVERBANK WETLAND
FEMA BOUNDARY
STREAM
WETLAND LINE & FLAG
STATE HIGHWAY LINE
STATE FREEWAY LINE

NAIL FOUND/SET
DRILL HOLE FOUND/SET
BOUND FOUND/SET
SIGN
BOLLARD
SOIL EVALUATION
CB CATCH BASIN
DCB DOUBLE CATCH BASIN
DMH DRAINAGE MANHOLE
FES FLARED END SECTION
GUY POLE
EMH ELECTRIC MANHOLE
UP UTILITY/POWER POLE
LIGHTPOST
SMH SEWER/SEPTIC MANHOLE
SEWER VALVE
CLEANOUT
HYDRANT
IRRIGATION VALVE
WATER VALVE
WELL
MONITORING WELL
UNKNOWN MANHOLE
GAS VALVE
BENCH MARK
STREAM FLOW DIRECTION

Proposed Legend

NOT ALL ITEMS SHOWN WILL APPEAR ON PLANS

PROPERTY LINE
BUILDING SETBACKS
CHAINLINK FENCE
CRUSHED STONEACCESS PATH (SEE DETAIL ON SHEET 14)
MINOR CONTOUR LINE
MAJOR CONTOUR LINE
SPOT ELEVATION
SAWCUT LINE
SOLAR ARRAY
SLOPES STEEPER THAN 15%

DRAINAGE LINE
SWALE
WATER LINE
OVERHEAD WIRE
ELECTRIC, TELEPHONE, CABLE LINE
LIMIT OF DISTURBANCE/ LIMIT OF CLEARING
SEDIMENTATION BARRIER, SILT FENCE (RIDOT STD 9.2.0), COMPOST SOCK OR APPROVED EQUAL
RIPRAP

Utility Note:

ALL UNDERGROUND UTILITIES SHOWN ON THIS PLAN WERE PROVIDED BY OTHERS AND ARE APPROXIMATE ONLY. LOCATIONS MUST BE DETERMINED IN THE FIELD BEFORE EXCAVATION, BLASTING, UTILITY INSTALLATION, BACKFILLING, GRADING, PAVEMENT RESTORATION, AND ALL OTHER SITE WORK. ALL UTILITY COMPANIES, PUBLIC AND PRIVATE, MUST BE CONTACTED INCLUDING THOSE IN CONTROL OF UTILITIES NOT SHOWN ON THESE DOCUMENTS. CONTACT DIG SAFE A MINIMUM OF 72 WORKING HOURS PRIOR TO ANY CONSTRUCTION AT 811. DIG SAFE IS RESPONSIBLE FOR CONTACTING MEMBER UTILITY COMPANIES. DIG SAFE MEMBER UTILITY COMPANIES ARE RESPONSIBLE TO MARK ONLY THE FACILITIES THAT THEY OWN OR MAINTAIN. NON DIG SAFE MEMBER COMPANIES ARE NOT NOTIFIED BY DIG SAFE. IT IS THE CONTRACTOR'S RESPONSIBILITY TO INVESTIGATE AND NOTIFY IF ANY PRIVATELY OWNED OR NON DIG SAFE MEMBER UTILITIES ARE IN THE AREA.

PER THE CODE OF FEDERAL REGULATIONS – TITLE 29, PART 1926 IT IS THE SITE CONTRACTOR'S RESPONSIBILITY TO OBTAIN ACCURATE UNDERGROUND UTILITY LINE LOCATIONS FROM THE UTILITY COMPANIES, UTILITY OWNERS AND, OR VIA UNDERGROUND UTILITY LOCATION EQUIPMENT AS NEEDED TO ESTABLISH ACCURATE LOCATIONS PRIOR TO ANY EXCAVATION. THE USE OF PROFESSIONAL UTILITY LOCATING COMPANIES PRIOR TO ANY EXCAVATION IS RECOMMENDED.

DIPRETE ENGINEERING IS NOT A PROFESSIONAL UTILITY LOCATION COMPANY, AND IS NOT RESPONSIBLE FOR UNDERGROUND UTILITIES, DEPICTED OR NOT, EITHER IN SERVICE OR ABANDONED. ANY SIZES, LOCATIONS, EXISTENCE, OR LACK OF EXISTENCE OF UTILITIES SHOWN ON THESE PLANS SHOULD BE CONSIDERED APPROXIMATE UNTIL VERIFIED BY A PROFESSIONAL UTILITY LOCATION COMPANY. DIPRETE ENGINEERING ASSUMES NO RESPONSIBILITY FOR DAMAGES INCURRED.

DiPrete Engineering
Two Stafford Court Cranston, RI 02920
tel 401-943-1000 fax 401-464-6006 www.diprete-eng.com
Boston • Providence • Newport

BRIAN C. GIROUX
STATE OF RHODE ISLAND
No. 9341
REGISTERED PROFESSIONAL ENGINEER CIVIL
07/07/2020

This plan set must not be used for construction purposes unless stamped 'Issued for Construction' and stamped by a registered Professional Engineer of DiPrete Engineering.

DiPrete Engineering only warrants plans on a DiPrete Engineering title block stamped by registered Professional Engineer of DiPrete Engineering. DiPrete Engineering does not warrant plans by any other party.

The contractor is responsible for all of the means, methods, safety precautions and requirements, and OSHA conformance in the implementation of this plan and design.

Existing utilities shown on this plan are approximate only. DiPrete Engineering assumes no responsibility for damages incurred due to locations of existing utilities. See 'Utility Note' on sheet 3.

No.	Date	Description	By:
9	07/07/2020	Crossman Peer Review Comment Revisions	J.L.S.
8	6/26/2020	Crossman Peer Review Comment Revisions	B.C.G.
7	06/23/2020	Crossman Peer Review Comment Revisions	J.L.S.
6	06/18/2020	Crossman Peer Review Comment Revisions	J.L.S.
5	06/04/2020	Crossman Peer Review Comment Revisions	J.L.S.
4	05/21/2020	Crossman Peer Review Comment Revisions	J.L.S.
3	05/01/2020	Updated Abutters	K.M.R
2	04/24/2020	Crossman Peer Review Comment Revisions	J.L.S.
1	03/31/2020	RIDEM/Development Plan Review Modifications	N.D.K.
0	01/27/2020	RIDEM Preliminary Determination Submission	J.L.S.

Drawn By: J.L.S. Checked By: D.R.N.

General Notes and Legend

Frontier Road Solar

Assessor's Plat 7 Lots 62, 62A & 63
Hopkinton, Rhode Island

Prepared For
Revity Energy, LLC
117 Metro Center Blvd, Warwick, Rhode Island 02886

DE Job No: 2437-021 Copyright 2020 by DiPrete Engineering Associates, Inc.

z:\demain\projects\2437-021 frontier road solar\autocad drawings\2437-021-cvar.dwg Plotted: 7/7/2020

ALTA/NSPS Land Title Survey Notes:

1. THE ADDRESS OF PARCEL IS 15 & 35 FRONTIER ROAD AND 354A MAIN STREET.
2. THERE WERE 41 PARKING SPACES OBSERVED AT THE TIME OF THE FIELD SURVEY. PARKING SPACES OBSERVED ON THE SUBJECT PARCEL ARE FOR ADJACENT PARCEL USE.
3. THE PARCEL HAS DIRECT ACCESS TO FRONTIER ROAD, A PUBLIC RIGHT OF WAY.
4. THERE ARE NO DIVIDING/PARTY WALLS LOCATED ALONG BOUNDARY OF THE PARCEL.
5. THERE WAS NO OBSERVED EVIDENCE OF EARTH MOVING WORK, BUILDING CONSTRUCTION AT THE TIME OF THE FIELD SURVEY.
6. THERE WAS NO OBVIOUS EVIDENCE OBSERVED OF A SOLID WASTE DUMP, SUMP OR SANITARY LANDFILL ON SITE AT THE TIME OF THE FIELD SURVEY. DIPRETE ENGINEERING IS NOT ACTING AS A EXPERT IN ENVIRONMENTAL MATTERS IN REGARDS TO THIS SURVEY AND IS NOT RESPONSIBLE FOR WHAT A PHASE ONE ENVIRONMENTAL ASSESSMENTS OF THE SUBJECT SITE WOULD REVEAL.
7. RIGHT OF WAY LINES ADJACENT TO SUBJECT PARCEL ARE AS SHOWN.
8. THERE WAS NO EVIDENCE OF RECENT STREET OR SIDEWALK CONSTRUCTION OR REPAIRS OBSERVED AT THE TIME OF THE FIELD SURVEY.
9. WETLANDS SHOWN BASED ON LOCATION BY OTHERS.
10. SURVEY BASED ON TITLE COMMITMENT #34476, 34477 & 34478, EFFECTIVE DATE JUNE 26, 2019 @ 8:30 AM BY CATIC

List of Possible Encroachments:

- A — OVERHEAD WIRES 10.8' OVER PROPERTY LIEN
- B — CONCRETE WALK 3.5' OVER PROPERTY LINE
- C — RAIL ROAD TIE WALL 3.2' OVER PROPERTY LINE

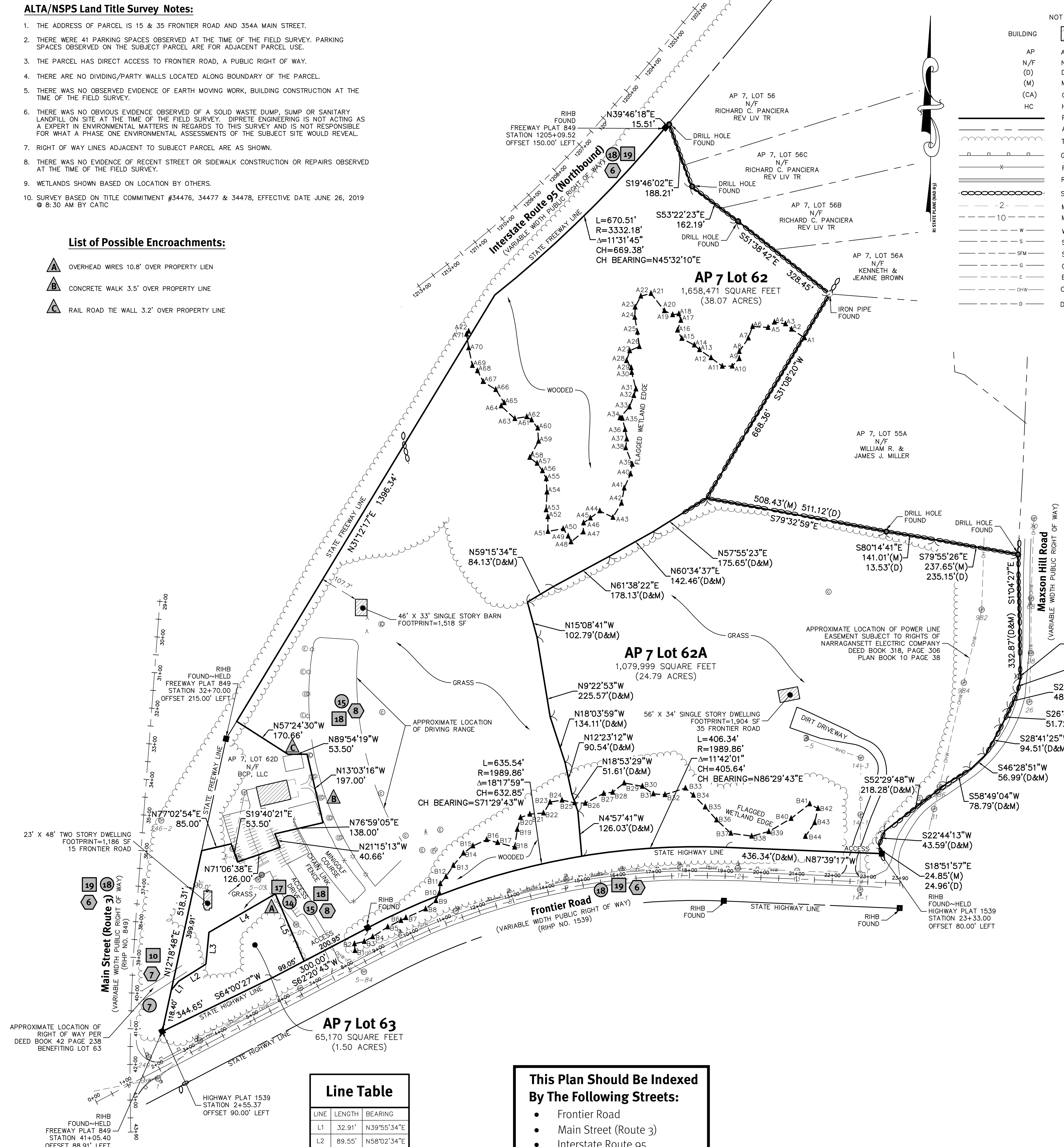

Line Table

LINE	LENGTH	BEARING
L1	32.91'	N39°55'34"E
L2	89.55'	N58°02'34"E
L3	89.98'	N5°28'35"E
L4	214.71'	N59°56'03"E
L5	204.98'	S23°11'57"E

This Plan Should Be Indexed By The Following Streets:

- Frontier Road
- Main Street (Route 3)
- Interstate Route 95
- Maxson Hill Road

Legend

NOT ALL ITEMS SHOWN WILL APPEAR ON THE SURVEY

- BUILDING
- AP — ASSESSOR'S PLAT
- N/F — NOW OR FORMERLY
- (D) — DEED
- (M) — MEASURED
- (CA) — CHORD ANGLE
- HC — HANDICAPPED
- PROPERTY LINE
- ASSESSORS LINE
- TREELINE
- GUARDRAIL
- FENCE
- RETAINING WALL
- STONE WALL
- MINOR CONTOUR LINE
- MAJOR CONTOUR LINE
- WATER LINE
- SEWER LINE
- SEWER FORCE MAIN
- GAS LINE
- ELECTRIC LINE
- OVERHEAD WIRES
- DRAINAGE LINE
- NAIL FOUND/SET
- DRILL HOLE FOUND/SET
- IRON ROD/PIPE FOUND/SET
- BOUND FOUND/SET
- SIGN
- BOLLARD
- SOIL EVALUATION
- CB — CATCH BASIN
- DCB — DOUBLE CATCH BASIN
- DMH — DRAINAGE MANHOLE
- FES — FLARED END SECTION
- GUY POLE
- EMH — ELECTRIC MANHOLE/HANDHOLE
- UP — UTILITY/POWER POLE
- LIGHTPOST
- SMH — SEWER/SEPTIC MANHOLE
- SEWER VALVE
- CLEANOUT
- HYDRANT
- IRRIGATION VALVE
- WATER VALVE
- WELL
- MONITORING WELL
- UNKNOWN MANHOLE
- GAS VALVE
- B-1 — WETLAND FLAG
- BENCH MARK
- SHRUB
- TREE

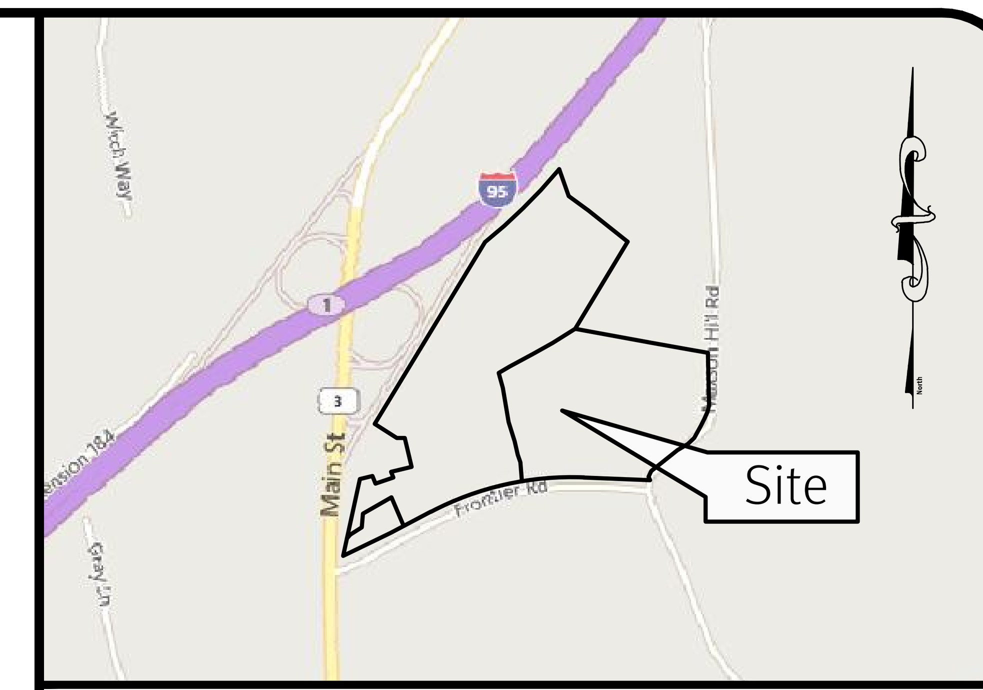

Locus Map Not To Scale

General Notes:

1. THE PARCELS ARE FOUND ON ASSESSOR'S PLAT 7, LOTS 62, 62A & 63 IN THE TOWN OF HOPKINTON, WASHINGTON COUNTY, RHODE ISLAND.
2. THE OWNER OF LOT 62 — HOPKINTON INVESTMENTS LLC PER DEED BOOK 401, PAGE 109

   THE OWNER OF LOT 62A — HOPKINTON INVESTMENTS LLC PER DEED BOOK 401, PAGE 109

   THE OWNER OF LOT 63 — HOPKINTON INVESTMENTS LLC PER DEED BOOK 391, PAGE 457
3. BASED ON GRAPHICAL PLOTTING ONLY, THE PARCEL IS LOCATED IN ZONE X PER FEDERAL EMERGENCY MANAGEMENT AGENCY FLOOD INSURANCE RATE MAP 44009C0135H, DATED OCOTBER 19, 2010. THIS DESIGNATION MAY CHANGE BASED UPON REVIEW BY A FLOOD ZONE SPECIALIST OR BY THE RESULTS OF A COMPREHENSIVE FLOOD STUDY.
4. THE PARCELS ARE ZONED MANUFACTURING BASED ON TOWN OF HOPKINTON ZONING MAP. ANY OVERLAY DISTRICTS, SPECIAL PERMITS OR VARIANCES SPECIFIC TO THIS SITE ARE NOT TAKEN INTO CONSIDERATION. PLEASE CONTACT THE ZONING DEPARTMENT FOR ANY ADDITIONAL INFORMATION OR FOR A CERTIFICATE OF ZONING.
5. THERE WERE NO CEMETERIES, GRAVE SITES AND OR BURIAL GROUNDS OBSERVED WITHIN THE LIMITS OF THE SURVEY.
6. FIELD SURVEY PERFORMED BY DIPRETE ENGINEERING ON NOVEMBER 27, 2019. THIS PLAN REFLECTS ON THE GROUND CONDITIONS AS OF THAT DATE.

Plan References:

1. "MINOR SUBDIVISION PLAN PREPARED FOR ALTON B. GRAY, JR. & NANCIE M. GRAY, PLAT 7, LOT 62, FRONTIER ROAD AND MAXSON HILL ROAD, HOPKINTON, RHODE ISLAND, SCALE 1"=100', JANUARY 17, 2002, BY CHERENZIA & ASSOCIATES, LTD., WESTERLY, RHODE ISLAND. RECORDED IN THE TOWN OF HOPKINTON LAND EVIDENCE RECORDS DEED BOOK 10, PAGE 38.
2. "FINAL MAXSON HILL SUBDIVISION EXISTING CONDITIONS PLAN" PREPARED FOR RICHARD C. PANCIERA REVOCABLE LIVING TRUST, PLAT 7 LOT 56 MAXSON HILL ROAD, HOPKINTON, RHODE ISLAND, SCALE 1"=100', DATED JULY 18, 2002, BY CHERENZIA & ASSOCIATES, LTD., WESTERLY, RHODE ISLAND. RECORDED IN THE TOWN OF HOPKINTON LAND EVIDENCE RECORDS PLAT BOOK 15, PAGE 26.
3. RHODE ISLAND FREEWAY PLAT 849.
4. RHODE ISLAND HIGHWAY PLAT 1539.
5. "HOPKINTON GOLF LEARNING CENTER MAIN STREET, FRONTIER ROAD AND MAXSON HILL ROAD, HOPKINTON, RHODE ISLAND, PROERTY LINE PLAN 6, ASSESSOR'S PLAT 7, LOTS 60–62, 62A & 63", SCALE 1"=40', DATED JULY 20, 2004, BY VANASSE HANGEN BRUSTLIN, INC., PROVIDENCE, RHODE ISLAND. RECORDED IN THE TOWN OF HOPKINTON LAND EVIDENCE RECORDS PLAT BOOK 12, PAGE 31.
6. "NARRAGANSETT ELECTRIC COMPANY, PROVIDENCE, R.I., HOPKINTON GOLF PARK, FRONTIER ROAD, HOPKINTON, RI.; DATE 8–3–2005." RECORDED IN THE TOWN OF HOPKINTON LAND EVIDENCE RECORDS PLAT BOOK 13, PAGE 24.
7. "PLAN TO ACCOMPANY ADMINISTRATIVE SUBDIVISION, PREPARED FOR FRONTIER ROAD PROPERTIES, LLC, ASSESSOR'S PLAT 7, PARCELS 60, 61, 62, 62A, AND 63, FRONTIER ROAD, MAIN STREET (RT. 3) AND INTERSTATE RT. 95, HOPKINTON, RHODE ISLAND" DATED JULY 20, 2009 AND PREPARED BY ALFRED W. DIORIO, RLS, INC., RECORDED IN THE TOWN OF HOPKINTON LAND EVIDENCE RECORDS PLAT BOOK 15, PAGE 12.
8. EASEMENT PLAN PREPARED FOR FRONTIER ROAD PROPERTIES, LLC HOPKINTON INVESTMENT, LLC ASSESSOR'S PLAT 7 PARCELS 60, 61, 62, 62A, AND 63 FRONTIER ROAD, MAIN STREET (RT. 3) AND INTERSTATE RT. 95 HOPKINTON, RHODE ISLAND. SCALE 1"=50'. DATED AUGUTS 11, 2009. PLAN BY ALFRED W. DIORIO, RLS, INC. RECORDED IN PLAT BOOK 15, PAGE 13.

Surveyor's Certificate:

TO: REVITY ENERGY, LLC. AND CATIC

THIS IS TO CERTIFY THAT THIS MAP OR PLAT AND THE SURVEY ON WHICH IT IS BASED WERE MADE IN ACCORDANCE WITH THE 2016 MINIMUM STANDARD DETAIL REQUIREMENTS FOR ALTA/NSPS LAND TITLE SURVEYS, JOINTLY ESTABLISHED AND ADOPTED BY ALTA AND NSPS, AND INCLUDES ITEMS 2, 3, 4, 6(A), 7(A), 7(B)(1), 8, 9, 13, 14, 16 & 18 OF TABLE A THEREOF. THE FIELD WORK WAS COMPLETED BETWEEN NOVEMBER 18–27, 2019
DATE OF PLAT OR MAP: APRIL 22, 2020

THIS SURVEY HAS BEEN CONDUCTED AND THE PLAN HAS BEEN PREPARED PURSUANT TO SECTION 9 OF THE RULES AND REGULATIONS ADOPTED BY THE RHODE ISLAND STATE BOARD OF REGISTRATION FOR PROFESSIONAL LAND SURVEYORS ON NOVEMBER 25, 2015, AS FOLLOWS:

TYPE OF SURVEY	MEASUREMENT SPECIFICATION
PERIMETER BOUNDARY SURVEY	CLASS I

THE PURPOSE FOR THE CONDUCT OF THE SURVEY AND FOR THE PREPARATION OF THE PLAN IS AS FOLLOWS: ALTA SURVEY.

4/22/20

ROBERT G. BABCOCK, RIPLS #2504, COA #LS.000A160

ROBERT G. BABCOCK
No. 2504
PROFESSIONAL LAND SURVEYOR

Scale: 1"=150'
0 75' 150' 300'

DiPrete Engineering
Two Stafford Court Cranston, RI 02920
tel 401-943-1000 fax 401-464-6006 www.diprete-eng.com
Boston • Providence • Newport

No.	Date	Description	By:
2	4/22/20	Client Comments	A.J.F.
1	1/28/20	Client Comments	A.J.F.
0	1/23/20	ALTA/NSPS Land Title Survey	E.L.T./A.J.F.

Drawn By: E.L.T.

ALTA/NSPS Land Title Survey
Frontier Road - Pavilion Solar

Hopkinton, Rhode Island

Client
Revity Energy, LLC.
117 Metro Center Boulevard, Suite 1007, Warwick, Rhode Island 02886
tel (401) 562-0211 fax (401) 443-8747

DE Job No: 2437-021 Copyright 2020 by DiPrete Engineering Associates, Inc.

z:\demain\projects\2437-021 frontier road solar\autocad drawings\2437-021-alta.dwg Plotted: 4/22/2020

Schedule B Exceptions (Lot 62):

SURVEY BASED ON TITLE COMMITMENT #34476 EFFECTIVE DATE JUNE 26, 2019 @ 8:30 AM BY CATIC

7 EASEMENT AS STATED IN BOOK 42 AT PAGE 238.
RESPONSE: AFFECTS SUBJECT PARCEL, APPROXIMATE LOCATION OF RIGHT OF WAY SHOWN ON SURVEY.

8 EASEMENT AS STATED IN BOOK 44 AT PAGE 580.
RESPONSE: AFFECTS SUBJECT PARCEL, BLANKET EASEMENT. DOCUMENT REFERS TO DRIFTWAY ASSOCIATED WITH GREENE BURIAL LOT. NO EVIDENCE OF DRIFTWAY OF BURIAL LOT OBSERVED.

9 EASEMENT AS STATED IN BOOK 52 AT PAGE 298
RESPONSE: AFFECTS SUBJECT PARCEL, BLANKET EASEMENT.

10 NOTICE OF FARM, FOREST & OPEN SPACE CLASSIFICATION RECORDED IN BOOK 229 AT PAGE 57; AS AFFECTED BY CORRECTIVE NOTICE RECORDED IN BOOK 247 AT PAGE 52 & BOOK 353 AT PAGE 442.
RESPONSE: AFFECTS SUBJECT PARCEL, NOT A SURVEY MATTER.

11 ZONING BOARD DECISION RECORDED IN BOOK 416 AT PAGE 473.
RESPONSE: AFFECTS SUBJECT PARCEL, NOT A SURVEY MATTER.

12 ZONING BOARD DECISION RECORDED IN BOOK 416 AT PAGE 474.
RESPONSE: AFFECTS SUBJECT PARCEL, NOT A SURVEY MATTER.

13 INSIGNIFICANT ALTERATION – PERMIT RECORDED IN BOOK 424 AT PAGE 553; REVISED PERMIT RECORDED IN BOOK 432 AT PAGE 116.
RESPONSE: AFFECTS SUBJECT PARCEL, NOT A SURVEY MATTER.

14 GRANT OF EASEMENT RECORDED IN BOOK 428 AT PAGE 414.
RESPONSE: AFFECTS SUBJECT PARCEL, IMPROVEMENTS OF ELECTRIC EASEMENT, SHOWN ON SURVEY.

15 DECLARATION OF EASEMENTS RECORDED IN BOOK 479 AT PAGE 1.
RESPONSE: AFFECTS SUBJECT PARCEL, BLANKET EASEMENT

16 WETLANDS AS DEPICTED ON PLAN BOOK 10 AT PAGE 38.
RESPONSE: AFFECTS SUBJECT PARCEL, NOT A SURVEY MATTER.

17 MATTERS PER PLAN BOOK 15 AT PAGE 12 AND PLAN BOOK 15 AT PAGE 13.
RESPONSE: AFFECTS SUBJECT PARCEL, PERTINENT INFORMATION SHOWN

18 EXCEPTING ALL HIGHWAY TAKINGS– SEE PLAT 849 REFERENCE TO PLAT 1539 CONNECTOR ROAD NO. 2 (FRONTIER RD.)
RESPONSE: AFFECTS SUBJECT PARCEL, SHOWN ON SURVEY.

19 ALL MATTERS ON THAT PLAN ENTITLED "FINAL MINOR SUBDIVISION PLAN PREPARED FOR ALTON B. GRAY, JR & NANCY M. GRAY, PLAT 7 LOT 62 FRONTIER ROAD & MAXON HILL ROAD, HOPKINTON, RHODE ISLAND; SCALE 1" = 100' DRAWN BY MEG, JANUARY 17, 2002 BY CHERENZIA & ASSOCIATES, LTD., WESTERLY, RHODE ISLAND".
RESPONSE: AFFECTS SUBJECT PARCEL, PERTINENT INFORMATION SHOWN

Schedule B Exceptions (Lot 62A):

SURVEY BASED ON TITLE COMMITMENT #34478 EFFECTIVE DATE JUNE 26, 2019 @ 8:30 AM BY CATIC

7 ALL MATTERS SHOWN ON MINOR SUBDIVISION PLAN RECORDED IN PB 10 AT PAGE 38.
RESPONSE: AFFECTS SUBJECT PARCEL, PERTINENT INFORMATION SHOWN

8 ALL MATTERS SHOWN ON PLAN RECORDED IN PB 15 AT PAGE 12 AND PB 15 AT PAGE 13.
RESPONSE: AFFECTS SUBJECT PARCEL, PERTINENT INFORMATION SHOWN

9 EASEMENT TO NARRAGANSETT ELECTRIC RECORDED IN BOOK 30 AT PAGE 588.
RESPONSE: DOCUMENT NOT PROVIDED FOR REVIEW.

10 RIGHT OF WAY RECORDED IN BOOK 42 AT PAGE 238.
RESPONSE: AFFECTS ADJACENT PARCEL PARCEL, APPROXIMATE LOCATION OF RIGHT OF WAY SHOWN ON SURVEY.

11 RIGHTS OF NARRAGENSETT ELECTRIC COMPANY RECORDED IN BOOK 52 AT PAGE 298.
RESPONSE: AFFECTS SUBJECT PARCEL, BLANKET EASEMENT.

12 NOTICE OF FARM, FOREST & OPEN SPACE CLASSIFICATION RECORDED IN BOOK 229 AT PAGE 57; CORRECTED FARM, FOREST & OPEN SPACE CLASSIFICATION RECORDED IN BOOK 247 AT PAGE 52.
RESPONSE: AFFECTS SUBJECT PARCEL, NOT A SURVEY MATTER.

13 FARM, FOREST & OPEN SPACE CLASSIFICATION RECORDED IN BOOK 353 AT PAGE 442.
RESPONSE: AFFECTS SUBJECT PARCEL, NOT A SURVEY MATTER.

14 DECISION OF THE ZONING BOARD OF REVIEW OF THE TOWN OF HOPKINTON RECORDED IN BOOK 416 AT PAGE 473.
RESPONSE: AFFECTS SUBJECT PARCEL, NOT A SURVEY MATTER.

15 DECISION OF THE ZONING BOARD OF REVIEW OF THE TOWN OF HOPKINTON RECORDED IN BOOK 416 AT PAGE 474.
RESPONSE: AFFECTS SUBJECT PARCEL, NOT A SURVEY MATTER.

16 INSIGNIFICANT ALTERATIONS – PERMIT RECORDED IN BOOK 424 AT PAGE 553; REVISED PERMIT RECORDED IN BOOK 432 AT PAGE 116.
RESPONSE: AFFECTS SUBJECT PARCEL, NOT A SURVEY MATTER.

17 GRANT OF EASEMENT RECORDED IN BOOK 428 AT PAGE 414.
RESPONSE: AFFECTS ADJACENT PARCEL, IMPROVEMENTS OF ELECTRIC EASEMENT, SHOWN ON SURVEY.

18 DECLARATION OF EASEMENTS RECORDED IN BOOK 479 AT PAGE 1.
RESPONSE: AFFECTS ADJACENT PARCEL, BLANKET EASEMENT.

19 EXCEPTING ALL HIGHWAY TAKINGS – SEE PLAT 849 REFERENCE TO PLAT 1539 CONECTOR ROAD NO. 2 (FRONTIER RD.).
RESPONSE: AFFECTS SUBJECT PARCEL, SHOWN ON SURVEY.

Schedule B Exceptions (Lot 63):

SURVEY BASED ON TITLE COMMITMENT #34477 EFFECTIVE DATE JUNE 26, 2019 @ 8:30 AM BY CATIC

6 EXCEPTING ALL HIGHWAY TAKINGS INCLUDING PLATS 849 AS AMENDED AND PLAT 1539 SHOWN AS CONNECTOR RD. NO 2 ON PLAT 849.
RESPONSE: AFFECTS SUBJECT PARCEL, SHOWN ON SURVEY.

7 APPURTENANT RIGHT OF WAY RECORDED IN BOOK 42 AT PAGE 238.
RESPONSE: AFFECTS SUBJECT PARCEL, APPROXIMATE LOCATION OF RIGHT OF WAY SHOWN ON SURVEY.

8 DECLARATION OF EASEMENTS RECORDED IN BOOK 479 AT PAGE 1.
RESPONSE: AFFECTS ADJACENT PARCEL, BLANKET EASEMENT.

9 DECISION OF THE ZONING BOARD OF REVIEW OF THE TOWN OF HOPKINTON RECORDED IN BOOK 416 AT PAGE 473.
RESPONSE: AFFECTS SUBJECT PARCEL, NOT A SURVEY MATTER.

10 DECISION OF THE ZONING BOARD OF REVIEW OF THE TOWN OF HOPKINTON RECORDED IN BOOK 416 AT PAGE 474.
RESPONSE: AFFECTS SUBJECT PARCEL, NOT A SURVEY MATTER.

11 INSIGNIFICANT ALTERATION – PERMIT RECORDED IN BOOK 424 AT PAGE 553; REVISED PERMIT RECORDED IN BOOK 432 AT PAGE 116.
RESPONSE: AFFECTS SUBJECT PARCEL, NOT A SURVEY MATTER.

Schedule A Description (Lot 62):

BEING LOT 62 ON THAT PLAN ENTITLED" FINAL MINOR SUBDIVISION PLAN PREPARED FOR ALTON B. GRAY, JR & NANCY M. GRAY, PLAT 7 LOT 62 FRONTIER ROAD & MAXON HILL ROAD, HOPKINTON, RHODE ISLAND; SCALE 1" = 100' DRAWN BY MEG, JANUARY 17, 2002 BY CHERENZIA &ASSOCIATES, LTD., WESTERLY, RHODE ISLAND".

Schedule A Description (Lot 62A):

THAT CERTAIN PIECE OR PARCEL OF LAND TOGETHER WITH ALL THE BUILDINGS AND IMPROVEMENTS THEREON, LOCATED ON THE WESTERLY SIDE OF MAXSON HILL ROAD AND THE NORTHERLY SIDE OF FRONTIER ROAD, TOWN OF HOPKINTON, COUNTY OF WASHINGTON, STATE OF RHODE ISLAND, AND BEING SHOWN AS PARCEL "B" ON THAT CERTAIN PLAN ENTITLED "MINOR SUBDIVISION PLAN PREPARED FOR ALTON B. GRAY, JR. & NANCIE M. GRAY, PLAT 7, LOT 621 FRONTIER ROAD AND MAXSON HILL ROAD, HOPKINTON, RHODE ISLAND, SCALE 1" = 100' NOVEMBER 27, 2001, BY CHERENZIA & ASSOCIATES1 LTD., WESTERLY, RHODE ISLAND, AND BEING MORE PARTICULARLY DESCRIBED AS FOLLOWS;

BEGINNING AT A RHODE ISLAND HIGHWAY BOUND LOCATED AT THE NORTHWEST CORNER OF THE INTERSECTION OF FRONTIER ROAD AND MAXSON HILL ROAD AS SHOWN ON THE AFOREMENTIONED PLAN, AND THE SOUTHEASTERLY CORNER OF THE HEREIN DESCRIBED PARCEL;

THENCE N 87° 39' 12" W, ALONG THE NORTHERLY STREET LINE OF FRONTIER ROAD FOR A DISTANCE OF 436.79 FEET TO A RHODE ISLAND HIGHWAY BOUND;

THENCE SOUTHWESTERLY, ALONG THE ARC OF A CURVE TO THE LEFT, AND THE NORTHERLY STREET LINE OF FRONTIER ROAD FOR A DISTANCE OF 404.5 FEET TO A DRILL HOLE SET IN THE SOUTHERLY END OF A STONE WALL, AT THE SOUTHEASTERLY CORNER OF PARCEL "N' AS SHOWN ON THE AFOREMENTIONED PLAN, SAID CURVE HAVING A RADIUS OF 1989.86 FEET, A CENTRAL ANGLE OF 11° 38' 03", AN A CHORD BEARING OF S 86°31' 39" W;

THENCE N 04° 557' 41" W, FOR A DISTANCE OF 126.76 FEET TO A DRILL HOLE;

THENCE N 18° 53' 29" W, FOR A DISTANCE OF 51.61 FEET TO A DRILL HOLE;

THENCE N 12° 231 12" W, FOR A DISTANCE OF 90.54 FEET TO A DRILL HOLE;

THENCE N 18° 03' 59" W, FOR A DISTANCE OF 134.11 FEET TO A DRILL HOLE;

THENCE N 09° 22' 53 W, FOR A DISTANCE OF 225.57 FEET TO A DRILL HOLE;

THENCE N 15° 08' 41" W, FOR A DISTANCE OF 102.79 FEET TO A DRILL HOLE AT A STONE WALL INTERSECTION AT ANDS NOW OR FORMERLY OF PHYLLIS E. GINGERELLA, TRUSTEE, AS SHOWN ON THE AFOREMENTIONED PLAN1 THE PREVIOUS SIX COURSES BEING ALONG A STONE WALL AND BOUNDED WESTERLY BY SAID PARCEL "A LANDS;

THENCE N 59° 15' 34" E, FOR A DISTANCE OF 84.13 FEET TO AN IRON PIPE;

THENCE N 61 ° 38' 22" E, FOR A DISTANCE OF 178.13 FEET TO A DRILL HOLE;

THENCE N 60° 34' 37" E, FOR A DISTANCE OF 142.46 FEET TO A DRILL HOLE;

THENCE N 57° 55' 23" E, FOR A DISTANCE OF 175.65 FEET TO A THREE WAY STONE WALL INTERSECTION AT LANDS NOW OR FORMERLY OF WILLIAM R. & DOROTHY A. MILLER, AS SHOWN ON THE AFOREMENTIONED PLAN, THE PREVIOUS FOUR COURSES BEING ALONG A STONE WALL AND BOUNDED NORTHWESTERLY BY SAID GINGERELLA LANDS;

THENCE S 79° 19' 34" E, FOR A DISTANCE OF 511.12 FEET;

THENCE S 80° 20' 18" E, FOR A DISTANCE OF 13.53 FEET TO A DRILL HOLE;

THENCE S 80° 01' 03" E, FOR A DISTANCE OF 235.15 FEET TO A DRILL HOLE AT A STONE WALL INTERSECTION ON THE WESTERLY STREET LINE OF MAXSON HILL ROAD, THE PREVIOUS THREE COURSES BEING ALONG A STONE WALL AND BOUNDED NORTHERLY BY SAID MILLER LANDS;

THENCE S 01 ° 03' 57" E, FOR A DISTANCE OF 332.7 4 FEET;

THENCE S OQO 32' 16" E, FOR A DISTANCE OF 16.27 FEET;

THENCE S 13° 40' 23" W, FOR A DISTANCE OF 40.19 FEET;

THENCE S 23° 31' 02" W, FOR A DISTANCE OF 48.51 FEET;

THENCE S 26° 46' 37" W, FOR A DISTANCE OF 51.72 FEET;

THENCE S 28° 41' 55" W, FOR A DISTANCE OF 94.51 FEET;

THENCE S 46° 29' 21" W, FOR A DISTANCE OF 56.99 FEET;

THENCE S 58° 49' 34" W, FOR A DISTANCE OF 78. 79 FEET;

THENCE S 52° 30' 18" W, FOR A DISTANCE OF 218.28 FEET;

THENCE S 22° 44' 43" W, FOR A DISTANCE OF 43.59 FEET;

THENCE S 18° 37' 09" E, FOR A DISTANCE OF 24.96 FEET TO A RHODE ISLAND HIGHWAY BOUND AND THE POINT AND PLACE OF BEGINNING, THE PREVIOUS ELEVEN COURSES BEING ALONG A STONE WALL AND THE WESTERLY STREET LINE OF MAXON HILL ROAD.

MEANING AND INTENDING TO DESCRIBE A PORTION OF THE PREMISES CONVEYED BY WARRANTY DEED DATED JANUARY 30, 2003 AND RECORDED FEBRUARY 13, 2003 AT 10:18·AM IN BOOK 369 AT PAGE 509.

Schedule A Description (Lot 63):

A CERTAIN TRACT OR PARCEL OF LAND LOCATED ON THE EASTERLY SIDE OF THE HIGHWAY LEADING FROM HOPKINTON CITY TO ASHAWAY WITH A DWELLING HOUSE AND OTHER IMPROVEMENTS THEREON, AND LOCATED IN THE TOWN OF HOPKINTON, COUNTY OF WASHINGTON AND STATE OF RHODE ISLAND, AND BOUNDED AND DESCRIBED AS FOLLOWS, TO WIT:

COMMENCING AT THE SOUTHWESTERLY COMER OF SAID TRACT AT THE END OF A STONE WALL AT SAID STATE HIGHWAY AND RUNNING IN A GENERAL EASTERLY DIRECTION ALONG THE LINE OF SAID STONE WALL, BOUNDING ON COTTRELL LAND, A DISTANCE OF APPROXIMATELY 618 FEET TO A CORNER OF A WALL; THENCE TURNING AND RUNNING IN A GENERAL NORTHERLY DIRECTION, ALONG THE LINE OF THE STONE WALL, BOUNDING ON LAND NOW OR FORMERLY OF WALTER D. KENYON AND EVANGELINE C. KENYON, A DISTANCE OF APPROXIMATELY 312 FEET TO AN IRON STUB IN THE WALL; THENCE TURNING AND RUNNING IN A GENERAL WESTERLY DIRECTION IN A STRAIGHT LINE, BOUNDING ON SAID WALTER D, KENYON AND EVARGELINE C. KENYON LAND A DISTANCE OF APPROXIMATELY 213 FEET TO AN IRON STUB AT THE END OF THE WALL; THENCE TURNING AND RUNNING IN A GENERAL SOUTHERLY DIRECTION IN A STRAIGHT LINE, BOUNDING ON SAID WALTER D. KENYON AND EVAIGELINE C. KENYON LAND A DISTANCE OF APPROXIMATELY 90 FEET TO AN IRON BOUND SET IN THE GROUND; THENCE TURNING AND RUNNING IN A GENERAL WESTERLY DIRECTION IN A STRAIGHT COURSE A DISTANCE OF APPROXIMATELY 90 FEET TO AN IRON BOUND SET IN THE GROUND; THENCE IN A GENERAL SOUTHWESTERLY DIRECTION IN A STRAIGHT LINE A DISTANCE OF APPROXIMATELY 175 FEET TO A POST IN THE GROUND AT THE SAID STATE HIGHWAY; THENCE IN A GENERAL SOUTHERLY DIRECTION, BOUNDED ON SAID STATE HIGHWAY A DISTANCE OF APPROXIMATELY 193 FEET TO THE POINT AND PLACE OF BEGINNING, TOGETHER WITH THE RIGHT TO USE THAT CERTAIN WAY LEADING FROM STATE HIGHWAY TO THE PREMISES HEREIN CONVEYED. EXCEPTING THEREFROM ANY LAND TAKEN BY THE STATE OF RHODE ISLAND FOR HIGHWAY PURPOSES.

MEANING AND INTENDING TO DESCRIBE THE SAME PREMISES CONVEYED BY QUITCLAIM DEED DATED OCTOBER 9, 2003 AND RECORDED NOVEMBER 6, 2003 AT 03:35·PM IN BOOK 391 AT PAGE 457.

Surveyor's Certificate:

TO: REVITY ENERGY, LLC. AND CATIC

THIS IS TO CERTIFY THAT THIS MAP OR PLAT AND THE SURVEY ON WHICH IT IS BASED WERE MADE IN ACCORDANCE WITH THE 2016 MINIMUM STANDARD DETAIL REQUIREMENTS FOR ALTA/NSPS LAND TITLE SURVEYS, JOINTLY ESTABLISHED AND ADOPTED BY ALTA AND NSPS, AND INCLUDES ITEMS 2, 3, 4, 6(A), 7(A), 7(B)(1), 8, 9, 13, 14, 16 & 18 OF TABLE A THEREOF. THE FIELD WORK WAS COMPLETED BETWEEN NOVEMBER 18–27, 2019
DATE OF PLAT OR MAP: APRIL 22, 2020

THIS SURVEY HAS BEEN CONDUCTED AND THE PLAN HAS BEEN PREPARED PURSUANT TO SECTION 9 OF THE RULES AND REGULATIONS ADOPTED BY THE RHODE ISLAND STATE BOARD OF REGISTRATION FOR PROFESSIONAL LAND SURVEYORS ON NOVEMBER 25, 2015, AS FOLLOWS:

TYPE OF SURVEY	MEASUREMENT SPECIFICATION
PERIMETER BOUNDARY SURVEY	CLASS I

THE PURPOSE FOR THE CONDUCT OF THE SURVEY AND FOR THE PREPARATION OF THE PLAN IS AS FOLLOWS: ALTA SURVEY.

4/22/20

ROBERT G. BABCOCK, RIPLS #2504, COA #LS.000A160

ROBERT G. BABCOCK
No. 2504
STATE OF RHODE ISLAND
HOPE
PROFESSIONAL LAND SURVEYOR

Scale: 1''=150'
0 75' 150' 300'

DiPrete Engineering
Two Stafford Court Cranston, RI 02920
tel 401-943-1000 fax 401-464-6006 www.diprete-eng.com
Boston • Providence • Newport

No.	Date	Description	By:
2	4/22/20	Client Comments	A.J.F.
1	1/28/20	Client Comments	A.J.F.
0	1/23/20	ALTA/NSPS Land Title Survey	E.L.T./A.J.F.

Drawn By: E.L.T.

ALTA/NSPS Land Title Survey
Frontier Road - Pavilion Solar
Hopkinton, Rhode Island

Client
Revity Energy, LLC.
117 Metro Center Boulevard, Suite 1007, Warwick, Rhode Island 02886
tel (401) 562-0211 fax (401) 443-8747

DE Job No: 2437-021 Copyright 2020 by DiPrete Engineering Associates, Inc.

z:\demain\projects\2437-021 frontier road solar\autocad drawings\2437-021-alta.dwg Plotted: 4/22/2020

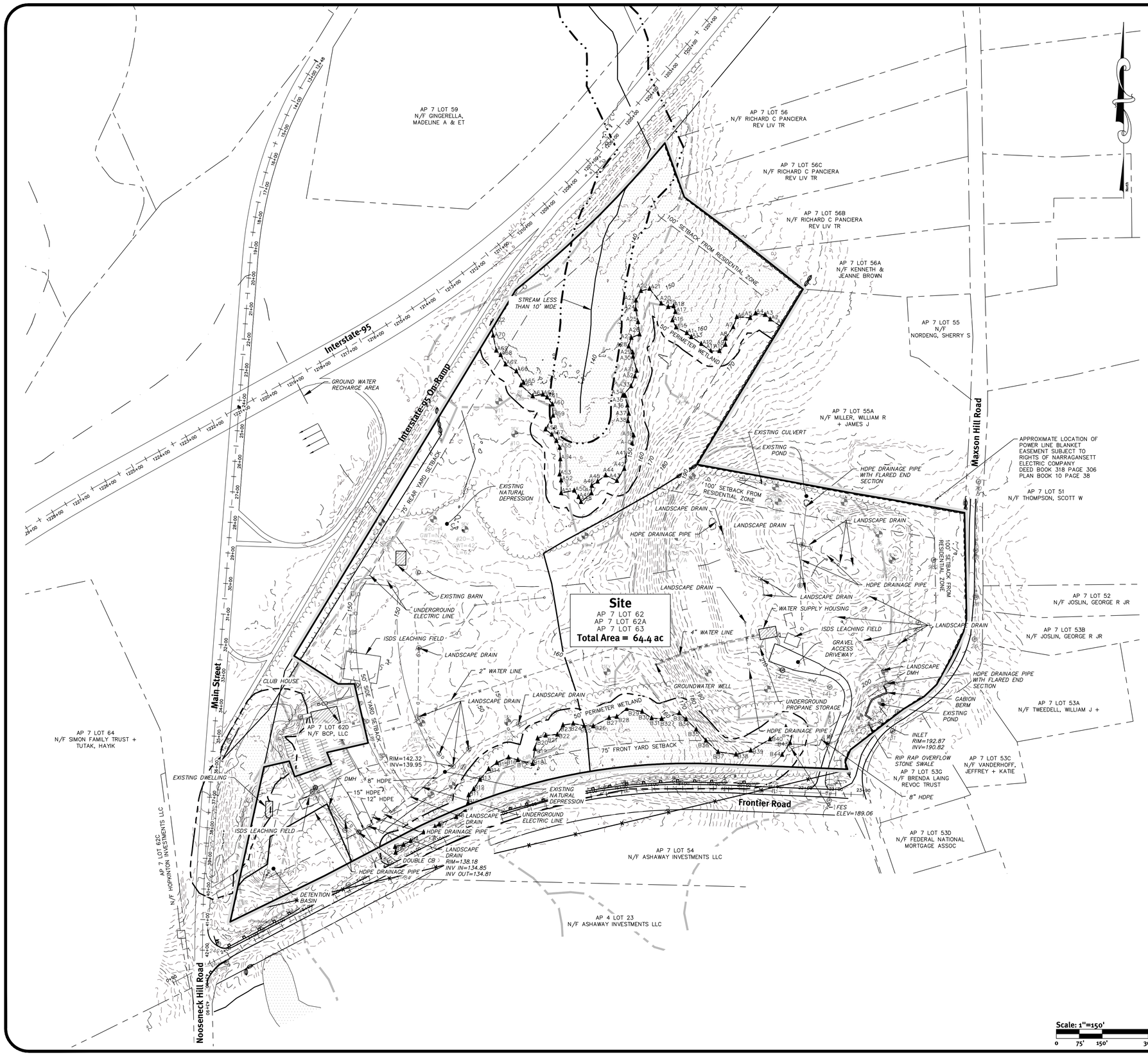

General Notes:

1. EXISTING ON-SITE UTILITIES SHOWN ARE PROVIDED FROM GROUND SURVEY BY DIPRETE ENGINEERING (SEE SURVEY PLAN SHEET) OR IN APPROXIMATE LOCATIONS BASED OFF OF VHB PLANS PREPARED FOR HOPKINTON GOLF PARK- SHEETS; "LAYOUT, MATERIALS AND UTILITY PLAN PANEL 1", SHEET C-3, AND "LAYOUT, MATERIALS AND UTILITY PLAN PANEL 2", SHEET C-4 DATED 09/06/05. SEE "UTILITY NOTE" ON SHEET 3.
2. CONTOUR DATA SHOWN ON THIS PLAN CONFORMS TO A A T-4 TOPOGRAPHICAL SURVEY STANDARD AS ADOPTED BY THE RHODE ISLAND BOARD OF REGISTRATION FOR PROFESSIONAL LAND SURVEYORS; SAID DATA IS BASED ON ELEVATION INFORMATION THAT WAS COLLECTED WITH AIRBORNE LIDAR TECHNOLOGY FOR THE ENTIRE AREA OF RHODE ISLAND BETWEEN APRIL 22 AND MAY 6, 2011 AS PART OF THE NORTHEAST LIDAR PROJECT. THIS DATA'S POSITIONAL ACCURACY AND RELIABILITY HAS NOT BEEN VERIFIED BY DIPRETE ENGINEERING AND IS SUBJECT TO CHANGES AN AUTHORITATIVE FIELD SURVEY MAY DISCLOSE.
3. THE WETLAND FLAG LOCATIONS AND STREAM LOCATIONS, WHERE PERTINENT TO THE DESIGN, WERE DELINEATED IN THE FIELD BY DIPRETE ENGINEERING USING GPS SUBMETER WITH AN ACCURACY OF 2 TO 5 FEET. THE REMAINDER OF EXISTING CONDITION DATA SHOWN IS FROM BEST AVAILABLE INFORMATION.

Certification:

THIS SURVEY HAS BEEN CONDUCTED AND THE PLAN HAS BEEN PREPARED PURSUANT TO SECTION 9 OF THE RULES AND REGULATIONS ADOPTED BY THE RHODE ISLAND STATE BOARD OF REGISTRATION FOR PROFESSIONAL LAND SURVEYORS ON NOVEMBER 25, 2015, AS FOLLOWS:

TYPE OF SURVEY	MEASUREMENT SPECIFICATION
DATA ACCUMULATION SURVEY (LIMITED)	CLASS T-4

THE PURPOSE FOR THE CONDUCT OF THE SURVEY AND FOR THE PREPARATION OF THE PLAN IS AS FOLLOWS:
TOPOGRAPHIC INFORMATION FOR ENGINEERING DESIGN.

ROBERT G. BABCOCK
No. 2504
PROFESSIONAL LAND SURVEYOR

6/26/2020
ROBERT G. BABCOCK, RIPLS #2504, COA #LS.000A160

DiPrete Engineering
Two Stafford Court Cranston, RI 02920
tel 401-943-1000 fax 401-464-6036 www.diprete-eng.com
Boston • Providence • Newport

BRIAN C. GIROUX
No. 8341
7/15/2020
REGISTERED PROFESSIONAL ENGINEER
CIVIL

This plan format not to be used for construction purposes unless stamped Issued for Construction and stamped by a registered Professional Engineer of DiPrete Engineering.

DiPrete Engineering only warrants plans on a DiPrete Engineering title block stamped by registered Professional Engineer of DiPrete Engineering. DiPrete Engineering does not warrant plans by any other party.

The contractor is responsible for all of the means, methods, safety precautions and requirements, and OSHA conformance in the implementation of this plan and design.

Existing utilities shown on this plan are approximate only. DiPrete Engineering does not guarantee the accuracy or completeness of the locations of existing utilities. See "Utility Note" on sheet 3.

No.	Date	Description	By:
9	07/07/2020	Consultant Peer Review Comment Revisions	J.L.S.
8	07/01/2020	Consultant Peer Review Comment Revisions	B.C.G.
7	06/30/2020	Consultant Peer Review Comment Revisions	J.L.S.
6	06/18/2020	Consultant Peer Review Comment Revisions	J.L.S.
5	06/04/2020	Consultant Peer Review Comment Revisions	J.L.S.
4	05/26/2020	Consultant Peer Review Comment Revisions	J.L.S.
3	05/01/2020	Updated Aquifers	K.A.R.
2	03/23/2020	Consultant Peer Review Comment Revisions	N.S.K.
1	03/12/2020	RIDEM Development Review Meeting Revisions	J.L.S.
0	01/27/2020	RIDEM Preliminary Determination Submission	J.L.S.

Drawn By: J.L.S. Checked By: D.R.N.

Existing Analysis Plan

Frontier Road Solar

Assessor's Plat 7 Lots 62, 62A & 63
Hopkinton, Rhode Island

Prepared for
Revity Energy, LLC
117 Metro Center Blvd, Warwick, Rhode Island 02886

SHEET 6 OF 14

DE Job No: 2437-021 Copyright 2020 by DiPrete Engineering Associates, Inc.

z:\demain\projects\2437-021 frontier road solar\autocad drawings\2437-021-plan.dwg Plotted: 7/7/2020

Note: This Plan Must Be Reproduced In Color

DiPrete Engineering
Two Stafford Court Cranston, RI 02920
tel 401-943-1000 fax 401-464-6006 www.diprete-eng.com
Boston • Providence • Newport

BRIAN C. GIROUX
No. 8341
7/15/2020
REGISTERED PROFESSIONAL ENGINEER CIVIL

This plan not intended to be used for construction purposes unless stamped 'Issued for Construction' and stamped by a registered Professional Engineer of DiPrete Engineering.

DiPrete Engineering only warrants plans on a DiPrete Engineering title block stamped by registered Professional Engineer of DiPrete Engineering. DiPrete Engineering does not warrant plans by any other party.

The contractor is responsible for all of the means, methods, safety precautions and requirements, and OSHA conformance in the implementation of this plan and design.

Existing utilities shown on this plan are approximate only. DiPrete Engineering does not warrant the accuracy or completeness of the locations of existing utilities. See 'Utility Note' on sheet 3.

No.	Date	Description	By:
9	07/07/2020	Concomm Peer Review Comment Revisions	J.L.S.
8	6/26/2020	Concomm Peer Review Comment Revisions	B.C.G.
7	06/22/2020	Concomm Peer Review Comment Revisions	J.L.S.
6	06/18/2020	Concomm Peer Review Comment Revisions	J.L.S.
5	06/04/2020	Concomm Peer Review Comment Revisions	J.L.S.
4	05/26/2020	Concomm Peer Review Comment Revisions	J.L.S.
3	05/01/2020	Updated Abutters	K.A.R.
2	03/31/2020	Concomm Peer Review Comment Revisions	J.L.S.
1	03/24/2020	RIDEM Pre-Application Peer Review Modifications	N.S.K.
0	01/27/2020	RIDEM Preliminary Determination Submission	J.L.S.

Drawn By: J.L.S. Checked By: D.R.N.

Overall SESC Plan

Frontier Road Solar

Assessor's Plat 7 Lots 62, 62A & 63
Hopkinton, Rhode Island

Prepared For
Revity Energy, LLC
117 Metro Center Blvd, Warwick, Rhode Island 02886

SHEET 7 OF 14

DE Job No: 2437-021 Copyright 2020 by DiPrete Engineering Associates, Inc.

z:\demain\projects\2437-021 frontier road solar\autocad drawings\2437-021-plan.dwg Plotted: 7/7/2020

Electric Offsite Improvement Plan by Others

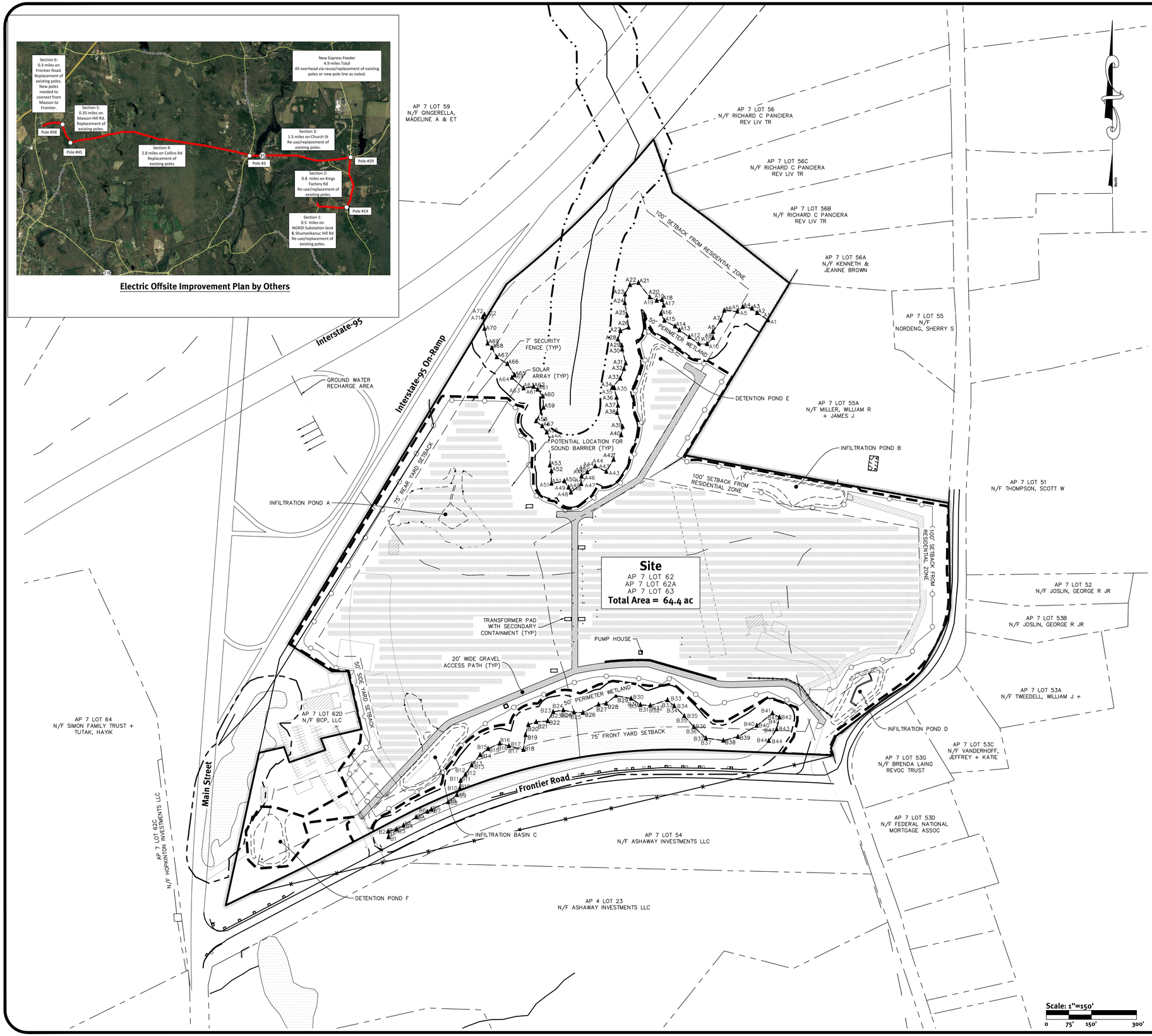

Site Layout Notes:

1. NO NEW WELLS OR OWTS PROPOSED. THE SOLAR SITE IS NOT PROPOSED TO BE SERVICED BY PUBLIC WATER OR SEWER.
2. ALL ELECTRICAL CONNECTIONS AND DISTRIBUTION LINES WITHIN THE FACILITY SHALL BE UNDERGROUND. ELECTRICAL EQUIPMENT BETWEEN THE FACILITY AND THE UTILITY CONNECTION MAY BE ABOVE GROUND IF REQUIRED BY THE UTILITY.
3. NO NEW LIGHTING INSTALLATIONS ARE PROPOSED.
4. PROPOSED SIGNAGE IS LIMITED TO SECURITY SIGNS (OR SIMILAR), OWNER IDENTIFICATION, AND 24-HOUR EMERGENCY CONTACT INFORMATION. TO BE INSTALLED ON THE FACILITY PERIMETER FENCING.
5. PROJECT WORK WILL BE UNDERTAKEN IN ONE PHASE, INCLUDING ALL ASSOCIATED SESC IMPLEMENTATION.
6. 20' MINIMUM SEPARATION IS REQUIRED BETWEEN THE SOLAR ARRAY AND PERIMETER FENCE.
7. CONSTRUCTION STAGING AREA TO INCLUDE CONCRETE WASHOUT AREA AND VEHICLE FUELING/ STORAGE/ MAINTENANCE AREA.
8. GROUND MOUNTED SOLAR INSTALLATIONS SHALL NOT EXCEED 12 FEET IN HEIGHT.
9. SECURITY FENCE TO BE A MINIMUM OF 7 FEET IN HEIGHT.
10. UNLESS CALLED OUT TO REMAIN, EXISTING UTILITIES ARE TO BE REMOVED DURING CONSTRUCTION.
11. THE SG 250HX INVERTERS MAY REQUIRE A SOUND BARRIER WITH AN NRC>0.20 AND SURROUNDS THE SIDES OF THE INVERTER THAT FACE THE PROPERTY LINE. THE SPECIFIC LOCATION AND DESIGN OF THE SOUND BARRIER WILL BE DETERMINED FOLLOWING THE POST CONSTRUCTION ENVIRONMENTAL NOISE ASSESSMENT THAT IS CONDUCTED WITHIN 90 DAYS OF THE SOLAR FARM BECOMING OPERATIONAL.
12. EQUIPMENT PADS WITH TRANSFORMER(S) REQUIRE SECONDARY CONTAINMENT OF 125% OF THE TOTAL FLUID FROM THE TRANSFORMER(S) ON THE PAD. A GEOMEMBRANE LINER WITH OIL FILTRATION WALLS, SUCH AS THE C.I.AGENT (OR COMPARABLE), IS TO BE INSTALLED PRIOR TO THE CEMENT BEING POURED FOR THE EQUIPMENT PADS. THE EXACT LAYOUT OF THE SECONDARY CONTAINMENT WILL BE DETERMINED DURING THE CONSTRUCTION PHASE AND WILL BE DESIGNED TO CONTAIN 125% OF THE TOTAL TRANSFORMER OIL VOLUME.

Dimensional Regulations:

CURRENT ZONING:	MANUFACTURING
MINIMUM LOT AREA:	80,000 SF
MINIMUM FRONTAGE AND LOT WIDTH:	225'
MINIMUM FRONT AND CORNER SIDE YARD:	75'
MINIMUM SIDE YARD:	50'
MINIMUM REAR YARD:	75'

*100' MINIMUM SETBACK REQUIRED FROM RESIDENTIAL ZONES

Proposed Totals:

AREA WITHIN FENCE:	37.2 ACRES
AREA TO BE CLEARED:	9.1 ACRES

11.309 MW DC and 9.250 MW AC Solar Farm

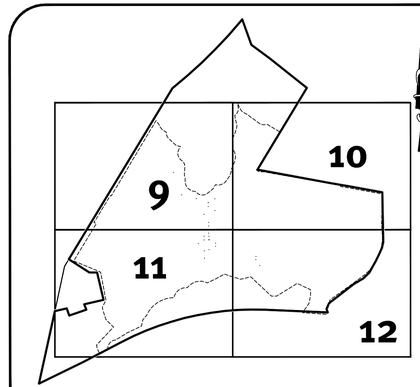

Key Map
SCALE 1"=500'

DiPrete Engineering
Two Stafford Court, Cranston, RI 02920
tel 401-943-1000 fax 401-464-6006 www.diprete-eng.com
Boston • Providence • Newport

BRIAN C. GIROUX
No. 9341
7/07/2020
REGISTERED PROFESSIONAL ENGINEER CIVIL

This document must not be used for construction purposes unless signed and sealed by the Professional Engineer of record.

DiPrete Engineering only warrants plans on a DiPrete Engineering title block stamped by registered Professional Engineer of DiPrete Engineering. DiPrete Engineering does not warrant plans by any other party.

The contractor is responsible for all of the means, methods, safety precautions and requirements, and OSHA conformance in the implementation of this plan and design.

Existing utilities shown on this plan are approximate only. DiPrete Engineering assumes no responsibility for damages incurred due to locations of existing utilities. See 'Utility Note' on sheet 3.

No.	Date	Description	By:
9	07/07/2020	Cranston Peer Review Comment Revisions	J.L.S.
8	6/26/2020	Cranston Peer Review Comment Revisions	R.J.G.
7	06/22/2020	Cranston Peer Review Comment Revisions	J.L.S.
6	06/18/2020	Cranston Peer Review Comment Revisions	J.L.S.
5	06/04/2020	Cranston Peer Review Comment Revisions	J.L.S.
4	05/22/2020	Cranston Peer Review Comment Revisions	J.L.S.
3	05/01/2020	Updated Abutters	K.R.R.
2	04/24/2020	Cranston Peer Review Comment Revisions	J.L.S.
1	04/07/2020	Updated Site Layout for RIEPA Application	J.L.S.
0	03/27/2020	RIEPA Preliminary Determination Submission	J.L.S.

Drawn By: J.L.S. Checked By: D.R.N.

Overall Site Layout Plan

Frontier Road Solar

Assessor's Plat 7 Lots 62, 62A & 63
Hopkinton, Rhode Island

Prepared For
Revity Energy, LLC
117 Metro Center Blvd, Warwick, Rhode Island 02886

DE Job No: 2437-021 Copyright 2020 by DiPrete Engineering Associates, Inc.

z:\demain\projects\2437-021 frontier road solar\autocad drawings\2437-021-plan.dwg Plotted: 7/7/2020

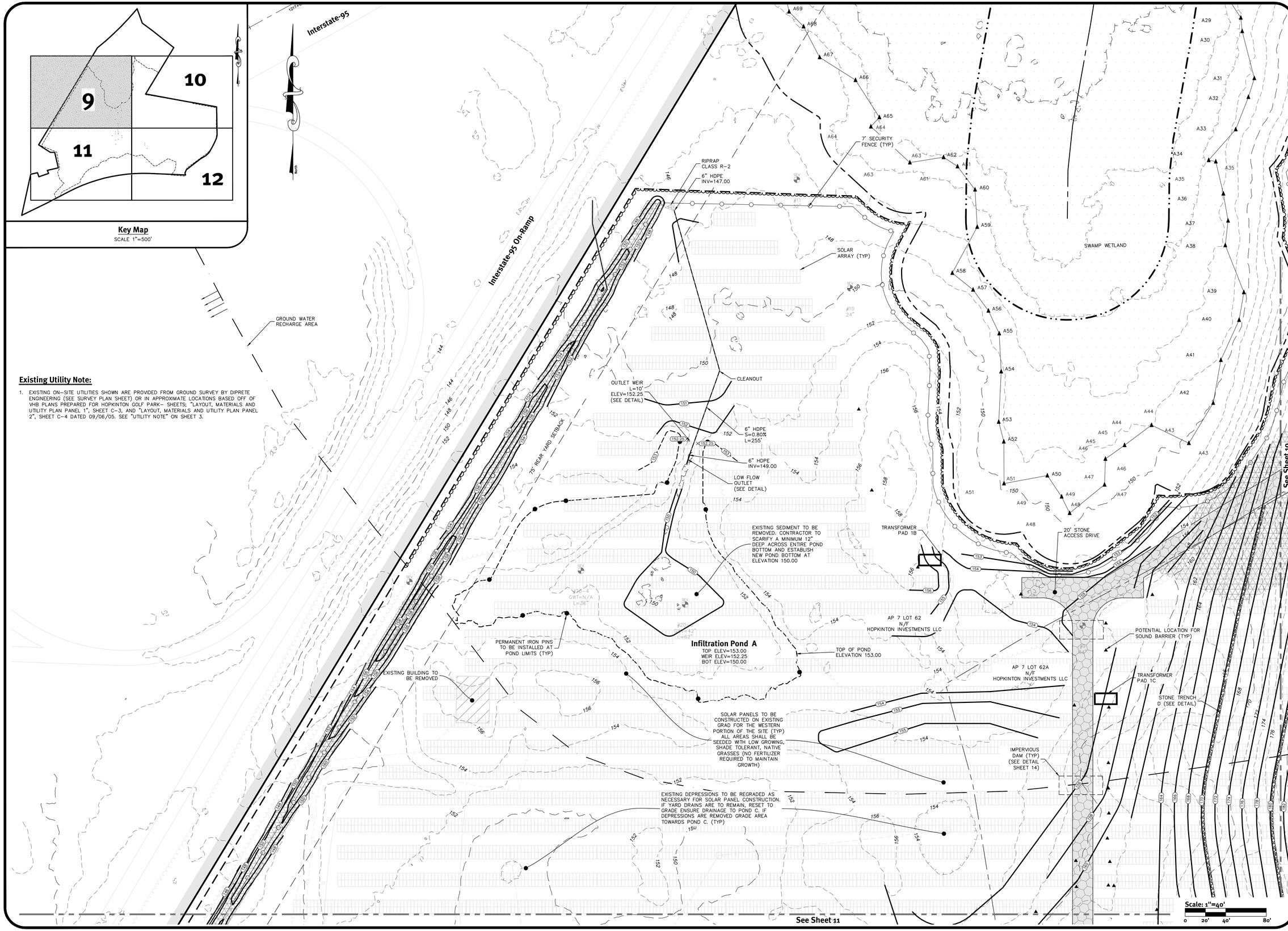

Existing Utility Note:

1. EXISTING ON-SITE UTILITIES SHOWN ARE PROVIDED FROM GROUND SURVEY BY DIPRETE ENGINEERING (SEE SURVEY PLAN SHEET) OR IN APPROXIMATE LOCATIONS BASED OFF OF VHB PLANS PREPARED FOR HOPKINTON GOLF PARK- SHEETS; "LAYOUT, MATERIALS AND UTILITY PLAN PANEL 1", SHEET C-3, AND "LAYOUT, MATERIALS AND UTILITY PLAN PANEL 2", SHEET C-4 DATED 09/06/05. SEE "UTILITY NOTE" ON SHEET 3.

DiPrete Engineering
Two Stafford Court Cranston, RI 02920
tel 401-943-1000 fax 401-464-6006 www.diprete-eng.com
Boston • Providence • Newport

BRIAN C. GIROUX
No. 9341
REGISTERED PROFESSIONAL ENGINEER CIVIL

This plan set must not be used for construction purposes unless stamped 'Issued for Construction' and stamped by a registered Professional Engineer of DiPrete Engineering.

DiPrete Engineering only warrants plans on a DiPrete Engineering title block stamped by registered Professional Engineer of DiPrete Engineering. DiPrete Engineering does not warrant plans by any other party.

The contractor is responsible for all of the means, methods, safety precautions and requirements, and OSHA conformance in the implementation of this plan and design.

Existing utilities shown on this plan are approximate only. DiPrete Engineering assumes no responsibility for damages incurred due to locations of existing utilities. See 'Utility Note' on sheet 3.

No.	Date	Description	By:
9	07/07/2020	Crossman Peer Review Comment Revisions	J.L.S.
8	6/26/2020	Crossman Peer Review Comment Revisions	B.C.G.
7	06/23/2020	Crossman Peer Review Comment Revisions	J.L.S.
6	06/18/2020	Crossman Peer Review Comment Revisions	J.L.S.
5	06/04/2020	Crossman Peer Review Comment Revisions	J.L.S.
4	05/21/2020	Crossman Peer Review Comment Revisions	J.L.S.
3	05/01/2020	Updated Abutters	C.M.R.
2	04/24/2020	Crossman Peer Review Comment Revisions	J.L.S.
1	03/31/2020	RIDEM/Development Plan Review Modifications	N.D.K.
0	01/27/2020	RIDEM Preliminary Determination Submission	J.L.S.

Drawn By: J.L.S. Checked By: D.R.N.

Site Plan - 1
Frontier Road Solar

Assessor's Plat 7 Lots 62, 62A & 63
Hopkinton, Rhode Island

Prepared for
Revity Energy, LLC
117 Metro Center Blvd, Warwick, Rhode Island 02886

DE Job No: 2437-021 Copyright 2020 by DiPrete Engineering Associates, Inc.

z:\demain\projects\2437-021 frontier road solar\autocad drawings\2437-021-plan.dwg Plotted: 7/7/2020

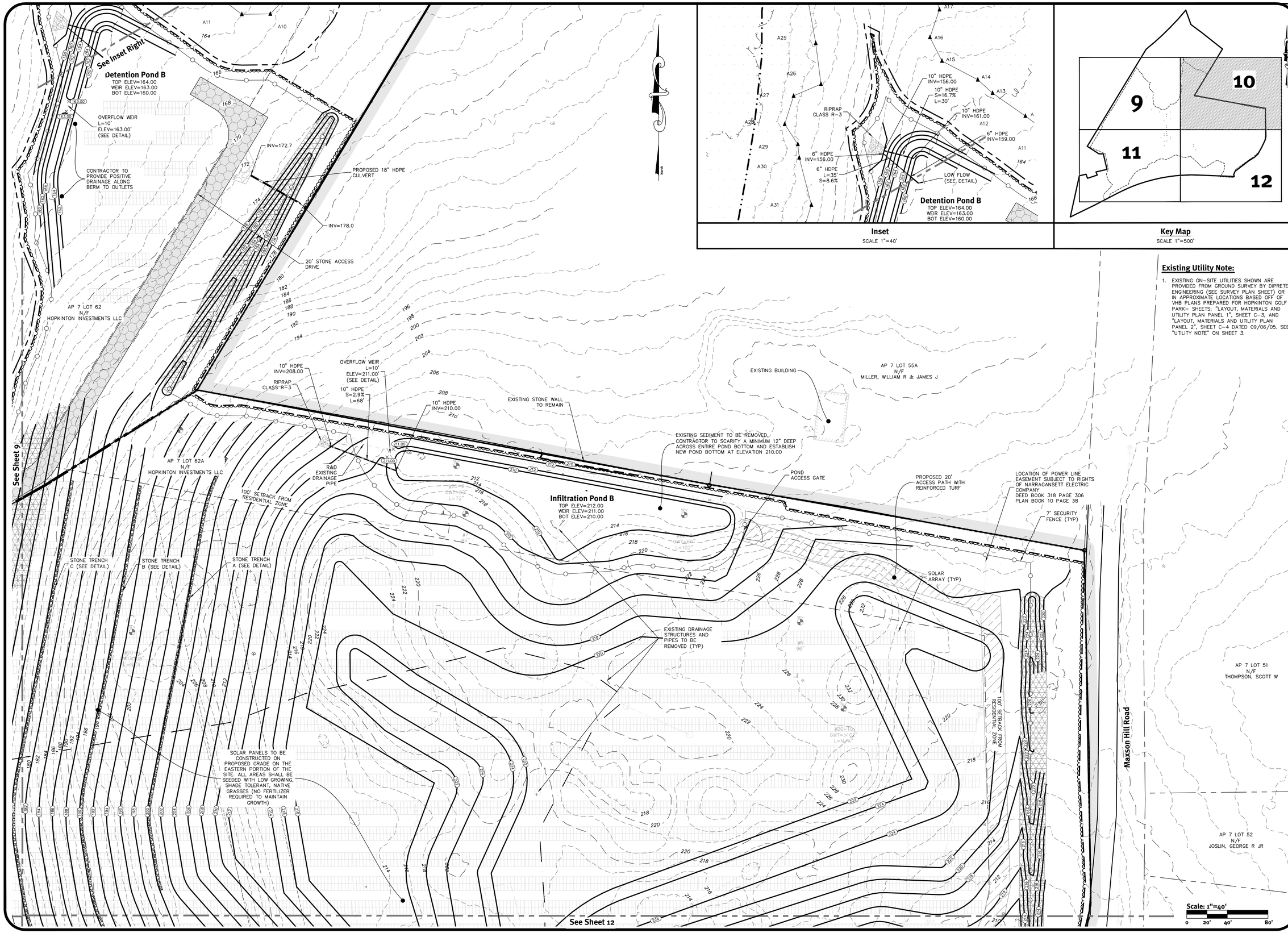

Inset
SCALE 1"=40'

Key Map
SCALE 1"=500'

Existing Utility Note:

1. EXISTING ON-SITE UTILITIES SHOWN ARE PROVIDED FROM GROUND SURVEY BY DIPRETE ENGINEERING (SEE SURVEY PLAN SHEET) OR IN APPROXIMATE LOCATIONS BASED OFF OF VHB PLANS PREPARED FOR HOPKINTON GOLF PARK- SHEETS; "LAYOUT, MATERIALS AND UTILITY PLAN PANEL 1", SHEET C-3, AND "LAYOUT, MATERIALS AND UTILITY PLAN PANEL 2", SHEET C-4 DATED 09/06/05. SEE "UTILITY NOTE" ON SHEET 3.

DiPrete Engineering
Two Stafford Court Cranston, RI 02920
tel 401-943-1000 fax 401-464-6046 www.diprete-eng.com
Boston • Providence • Newport

BRIAN C. GIROUX
No. 8341
7/15/2020
REGISTERED PROFESSIONAL ENGINEER
CIVIL

This plan set must not be used for construction purposes unless stamped "Issued for Construction" and stamped by a registered Professional Engineer of DiPrete Engineering.

DiPrete Engineering only warrants plans on a DiPrete Engineering title block stamped by registered Professional Engineer of DiPrete Engineering. DiPrete Engineering does not warrant plans by any other party.

The contractor is responsible for all of the means, methods, safety precautions and requirements, and OSHA conformance in the implementation of this plan and design.

Existing utilities shown on this plan are approximate only. DiPrete Engineering does not guarantee the accuracy of existing utilities or locations of existing utilities. See "Utility Note" on sheet 3.

No.	Date	Description	By:
9	07/07/2020	Cocksman Peer Review Comment Revisions	J.L.S.
8	6/26/2020	Cocksman Peer Review Comment Revisions	B.C.G.
7	06/22/2020	Cocksman Peer Review Comment Revisions	J.L.S.
6	06/18/2020	Cocksman Peer Review Comment Revisions	J.L.S.
5	06/04/2020	Cocksman Peer Review Comment Revisions	J.L.S.
4	05/26/2020	Cocksman Peer Review Comment Revisions	J.L.S.
3	05/01/2020	Updated Aquifer	K.A.R.
2	03/24/2020	RIDEM Peer Review Comment Revisions	N.D.K.
1	01/29/2020	RIDEM Preliminary Determination Submission	J.L.S.
0	01/27/2020	Drawn By: J.L.S.	Checked By: D.R.N.

Site Plan - 2

Frontier Road Solar

Assessor's Plat 7 Lots 62, 62A & 63
Hopkinton, Rhode Island

Prepared For
Revity Energy, LLC
117 Metro Center Blvd, Warwick, Rhode Island 02886

SHEET 10 OF 14

DE Job No: 2437-021 Copyright 2020 by DiPrete Engineering Associates, Inc.

z:\demain\projects\2437-021 frontier road solar\autocad drawing\2437-021-plan.dwg Plotted: 7/7/2020

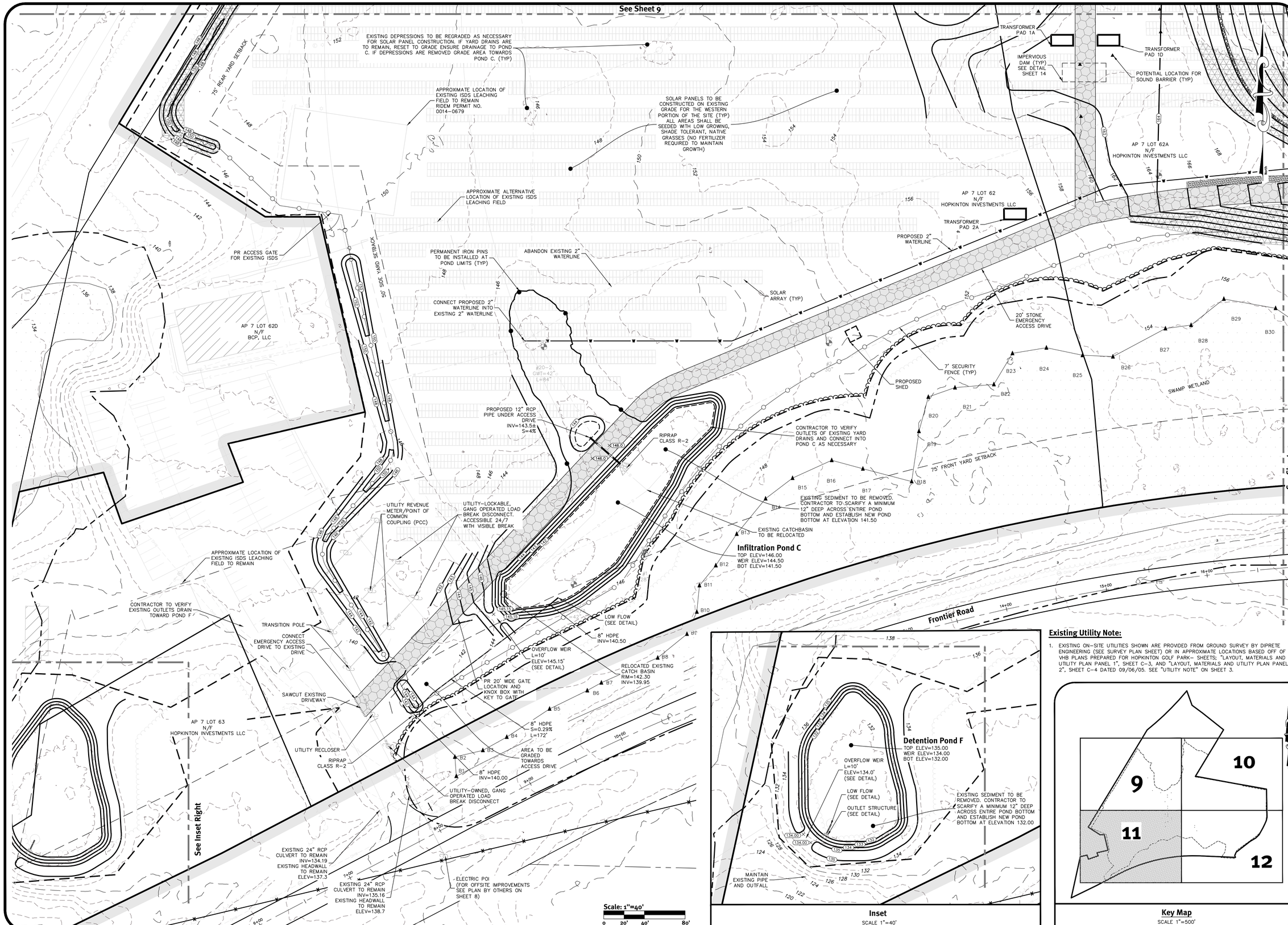

Existing Utility Note:

1. EXISTING ON-SITE UTILITIES SHOWN ARE PROVIDED FROM GROUND SURVEY BY DIPRETE ENGINEERING (SEE SURVEY PLAN SHEET) OR IN APPROXIMATE LOCATIONS BASED OFF OF VHB PLANS PREPARED FOR HOPKINTON GOLF PARK- SHEETS; "LAYOUT, MATERIALS AND UTILITY PLAN PANEL 1", SHEET C-3, AND "LAYOUT, MATERIALS AND UTILITY PLAN PANEL 2", SHEET C-4 DATED 09/06/05. SEE "UTILITY NOTE" ON SHEET 3.

DiPrete Engineering
Two Stafford Court Cranston, RI 02920
tel 401-943-1000 fax 401-464-6046 www.diprete-eng.com
Boston • Providence • Newport

BRIAN C. GIROUX
No. 9341
7/15/2020
REGISTERED PROFESSIONAL ENGINEER CIVIL

This date self-inspected for approval for construction purposes stamped "Issued for Construction" and stamped by a registered Professional Engineer of DiPrete Engineering.

DiPrete Engineering only warrants plans on a DiPrete Engineering title block stamped by registered Professional Engineer of DiPrete Engineering. Plans without professional engineering seal are for other party.

The contractor is responsible for all of the means, methods, safety precautions and requirements, and OSHA conformance in the implementation of this plan and design.

Existing utilities shown on this plan are approximate only. DiPrete Engineering does not warrant the accuracy of the locations of existing utilities. See Utility Note on sheet 3.

No.	Date	Description	Checked By: D.R.N.
9	07/07/2020	Consultant Peer Review Comment Revisions	J.L.S.
8	07/02/2020	Consultant Peer Review Comment Revisions	R.C.G.
7	06/29/2020	Consultant Peer Review Comment Revisions	J.L.S.
6	06/18/2020	Consultant Peer Review Comment Revisions	J.L.S.
5	06/16/2020	Consultant Peer Review Comment Revisions	J.L.S.
4	06/04/2020	Consultant Peer Review Comment Revisions	J.L.S.
3	05/01/2020	Updated Albertus	K.A.R.
2	03/24/2020	RIDEM Preliminary Review Comments	J.L.S.
1	03/13/2020	RIDEM Preliminary Determination Submission	N.D.K.
0	01/27/2020	RIEC Pre-Development Plan Review Meeting Submission	J.L.S.

Drawn By: J.L.S.

Site Plan - 3

Frontier Road Solar

Assessor's Plat 7 Lots 62, 62A & 63
Hopkinton, Rhode Island

Prepared For
Revity Energy, LLC
117 Metro Center Blvd, Warwick, Rhode Island 02886

SHEET 11 OF 14

DE Job No: 2437-021 Copyright 2020 by DiPrete Engineering Associates, Inc.

z:\domain\projects\2437-021 frontier road solar\autocad drawing\2437-021-plan.dwg Plottedt: 7/7/2020

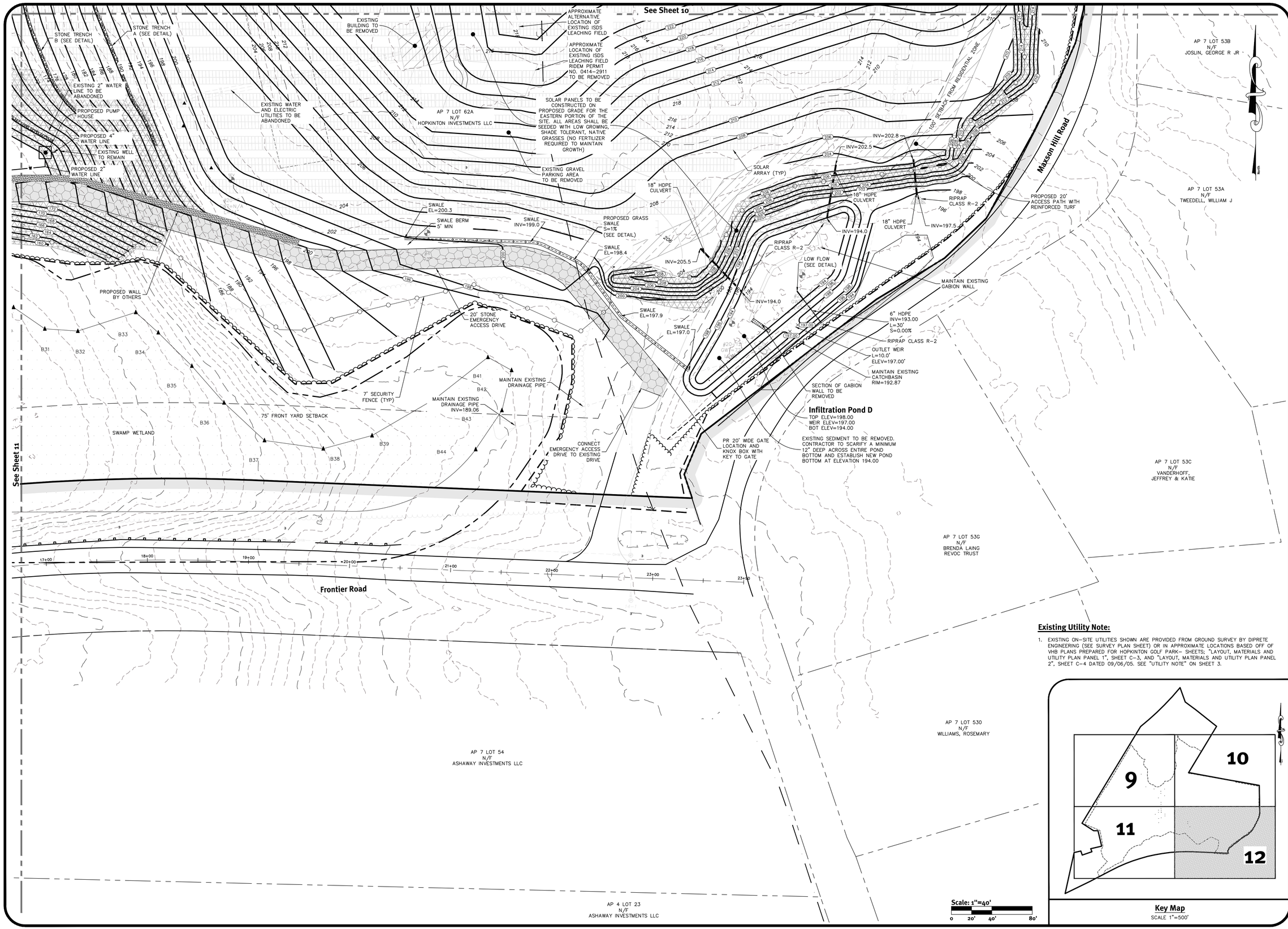

Existing Utility Note:

1. EXISTING ON-SITE UTILITIES SHOWN ARE PROVIDED FROM GROUND SURVEY BY DIPRETE ENGINEERING (SEE SURVEY PLAN SHEET) OR IN APPROXIMATE LOCATIONS BASED OFF OF VHB PLANS PREPARED FOR HOPKINTON GOLF PARK- SHEETS; "LAYOUT, MATERIALS AND UTILITY PLAN PANEL 1", SHEET C-3, AND "LAYOUT, MATERIALS AND UTILITY PLAN PANEL 2", SHEET C-4 DATED 09/06/05. SEE "UTILITY NOTE" ON SHEET 3.

DiPrete Engineering
Two Stafford Court Cranston, RI 02920
tel 401-943-1000 fax 401-464-6066 www.diprete-eng.com
Boston • Providence • Newport

BRIAN C. GIROUX
No. 9341
7/15/2020
REGISTERED PROFESSIONAL ENGINEER CIVIL

This plan set must not be used for construction purposes unless stamped "Issued for Construction" and stamped by a registered Professional Engineer of DiPrete Engineering.

DiPrete Engineering only warrants plans on a DiPrete Engineering title block stamped by registered Professional Engineer of DiPrete Engineering. DiPrete Engineering does not warrant plans by any other party.

The contractor is responsible for all of the means, methods, safety precautions and requirements, and OSHA conformance in the implementation of this plan and design.

Existing utilities shown on this plan are approximate only. DiPrete Engineering assumes no responsibility for damages incurred due to locations of existing utilities. See "Utility Note" on sheet 3.

No.	Date	Description	By:
9	07/07/2020	Cranston Peer Review Comment Revisions	J.L.S.
8	07/03/2020	Cranston Peer Review Comment Revisions	B.C.G.
7	06/29/2020	Cranston Peer Review Comment Revisions	J.L.S.
6	06/18/2020	Cranston Peer Review Comment Revisions	J.L.S.
5	06/09/2020	Cranston Peer Review Comment Revisions	J.L.S.
4	05/26/2020	Updated Layout	A.R.P.
3	05/01/2020	Updated Layout	A.R.P.
2	03/24/2020	RIDEM Comments Revisions	N.B.K.
1	03/13/2020	RIDEM Preliminary Plan Review Modifications	N.B.K.
0	01/27/2020	RIDEM Preliminary Determination Submission	J.L.S.

Drawn By: J.L.S. Checked By: D.R.N.

Site Plan - 4

Frontier Road Solar

Assessor's Plat 7 Lots 62, 62A & 63
Hopkinton, Rhode Island

Prepared For:
Revity Energy, LLC
117 Metro Center Blvd, Warwick, Rhode Island 02886

SHEET 12 OF 14

DE Job No: 2437-021 Copyright 2020 by DiPrete Engineering Associates, Inc.

z:\demain\projects\2437-021 frontier road solar\autocad drawings\2437-021-plan.dwg Plottest: 7/7/2020

DRAINAGE SWALE STONE CHECK DAM

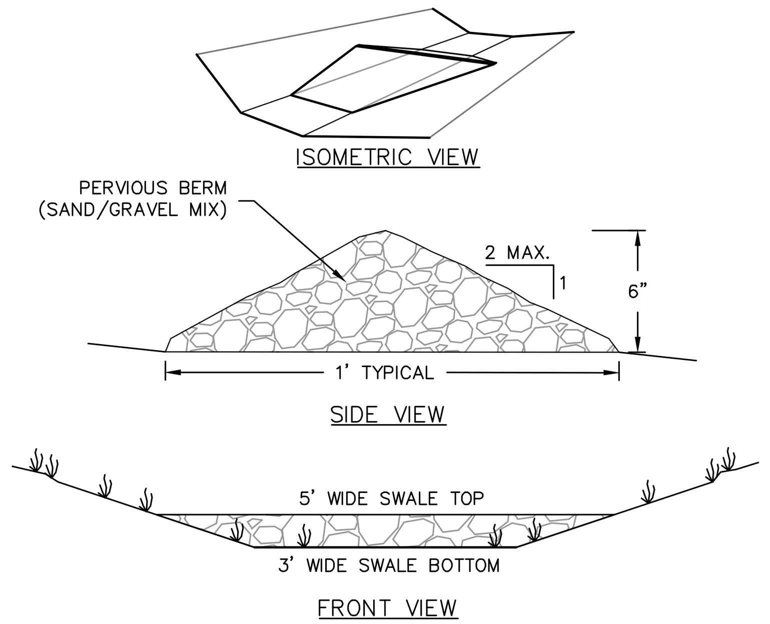

NOT TO SCALE

SEDIMENT TRAP DIMENSIONS*	TRAP A	TRAP B	TRAP C	TRAP D	TRAP E	TRAP F
TRIBUTARY DRAINAGE AREA	4.588 ac	3.019 ac	4.938 ac	4.420 ac	1.895 ac	2.940 ac
WET STORAGE DEPTH (Dw)	2.0 ft	2.0 ft	3.0 ft	3.0 ft	2.0 ft	2.0 ft
DRY STORAGE DEPTH (Dd)	2.0 ft	2.0 ft	2.0 ft	2.0 ft	2.0 ft	2.0 ft
TOTAL DEPTH (D)	4.0 ft	4.0 ft	5.0 ft	5.0 ft	4.0 ft	4.0 ft
BOTTOM OF TRAP AREA (Ab)	4,357 sq.ft	2,610 sq.ft	2,976 sq.ft	2,976 sq.ft	2,610 sq.ft	2,610 sq.ft
WETTED SURFACE AREA (Aw)	5,615 sq.ft	3,580 sq.ft	5,775 sq.ft	5,775 sq.ft	3,580 sq.ft	3,580 sq.ft
SURFACE AREA AT OUTLET (Ad)	6,973 sq.ft	4,650 sq.ft	7,766 sq.ft	7,766 sq.ft	4,650 sq.ft	4,650 sq.ft

*TRAP DIMENSIONS REPRESENT MINIMUM REQUIRED SIZING TO MEET THE RISESCH. CONTRACTOR MAY SHAPE TRAP DIFFERENTLY THAN SHOWN ON PLANS AS LONG AS THE MINIMUM SIZING HAS BEEN PROVIDED.

MINIMUM TOP WIDTH VS HEIGHT
H=HEIGHT OF EMBANKMENT
W=TOP WIDTH OF EMBANKMENT

H (FT)	1.5	2.0	2.5	3.0	3.5	4.0	4.5	5.0
W (FT)	2.0	2.0	3.0	2.5	3.0	3.0	4.0	4.5

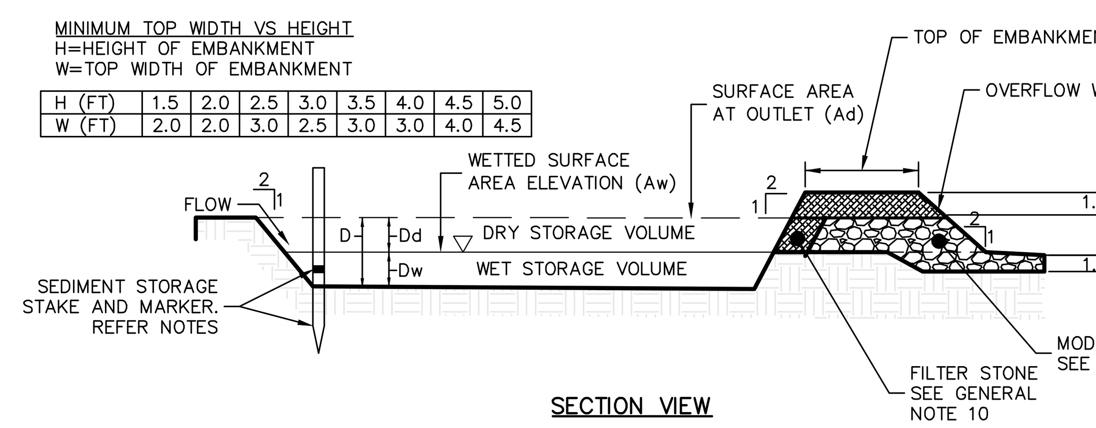

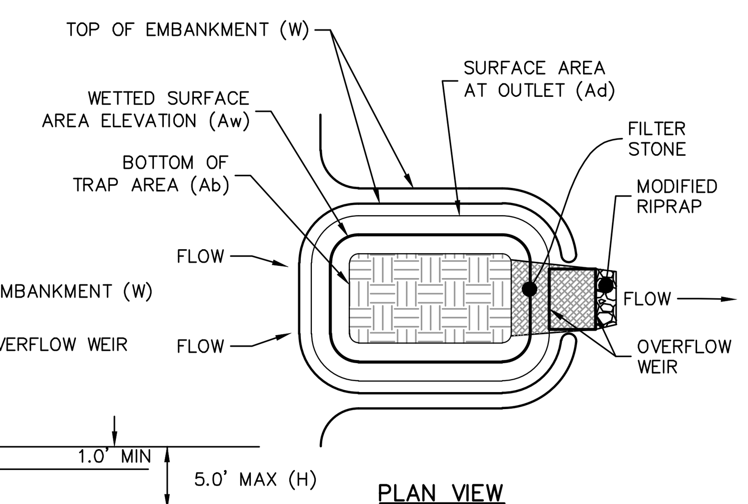

Temporary Sediment Trap Detail

NOT TO SCALE

GENERAL NOTES:

1. THE TEMPORARY SEDIMENT TRAP SHALL MEET ALL REQUIREMENTS FOR TEMPORARY SEDIMENT TRAPS OUTLINED IN THE RHODE ISLAND SOIL EROSION AND SEDIMENT CONTROL HANDBOOK (LATEST REVISION) SECTION SIX: SEDIMENT CONTROL MEASURES
2. THE TEMPORARY SEDIMENT TRAP MUST PROVIDE A STORAGE VOLUME FOR ONE INCH OF RUNOFF FROM THE CONTRIBUTING AREA. HALF OF THE STORAGE MUST BE PROVIDED IN THE FORM OF WET STORAGE. SEE DETAIL BELOW SECTION 6 OF THE RISESCH.
3. ALL CUT AND FILL SLOPES MUST BE 2:1 OR FLATTER EXCEPT FOR THE EXCAVATED WET STORAGE AREA WHERE SLOPES MUST NOT EXCEED 1.5:1.
4. THE OUTLET MUST BE LOCATED AT THE MOST DISTANT HYDRAULIC POINT FROM THE INLET.
5. THE OUTLET CONSISTS OF A PERVIOUS STONE DIKE WITH A CORE OF MODIFIED RIPRAP AND FACED ON THE UPSTREAM SIDE WITH STONE.
6. TEMPORARY SEDIMENT TRAPS MUST OUTLET ONTO STABILIZED GROUND.
7. MAXIMUM HEIGHT OF A TEMPORARY SEDIMENT TRAP EMBANKMENT IS LIMITED TO 5 FEET (BOTTOM OF DRY STORAGE TO TOP OF EMBANKMENT). TOTAL EMBANKMENT HEIGHT MUST NOT EXCEED 6 FEET (BOTTOM OF WET STORAGE TO TOP OF EMBANKMENT).
8. SIDE SLOPES OF THE EMBANKMENT MUST BE 2:1 OR FLATTER.
9. MODIFIED RIPRAP: SHALL MEET THE REQUIREMENTS OF RIDOT STANDARD SPECIFICATIONS FOR ROAD AND BRIDGE CONSTRUCTION SUBSECTION M.10.03.2.
10. FILTER STONE: SHALL MEET THE REQUIREMENTS OF RIDOT STANDARD SPECIFICATIONS FOR ROAD AND BRIDGE CONSTRUCTION SUBSECTION M.01.03 TABLE I, COLUMN V FILTER STONE.

INSPECTION, MAINTENANCE, AND REMOVAL REQUIREMENTS:

1. INSTALL "SEDIMENT STORAGE" STAKE WITH A MARKER AT ONE HALF OF THE WET STORAGE VOLUME.
2. INSPECT THE TEMPORARY SEDIMENT TRAP AT LEAST ONCE A WEEK AND WITHIN 24 HOURS OF THE END OF A STORM WITH A RAINFALL AMOUNT OF 0.25 INCH OR GREATER.
3. CHECK THE OUTLET TO ENSURE THAT IT IS STRUCTURALLY SOUND AND HAS NOT BEEN DAMAGED BY EROSION OR CONSTRUCTION EQUIPMENT.
4. CHECK FOR SEDIMENT ACCUMULATION AND FILTRATION PERFORMANCE.
5. WHEN SEDIMENTS HAVE ACCUMULATED TO ONE HALF THE MINIMUM REQUIRED VOLUME OF THE WET STORAGE, DEWATER THE TRAP AS NEEDED, REMOVE SEDIMENTS AND RESTORE THE TRAP TO ITS ORIGINAL DIMENSIONS.
6. DISPOSE OF THE SEDIMENT REMOVED FROM THE BASIN IN A SUITABLE AREA AS DESIGNATED BY THE GEOTECHNICAL ENGINEER.
7. THE TEMPORARY SEDIMENT TRAP MAY BE REMOVED AFTER THE CONTRIBUTING DRAINAGE AREA IS STABILIZED.

INSTALLATION NOTES:

1. CLEAR, GRUB AND STRIP ANY VEGETATION AND ROOT MAT FROM ANY PROPOSED EMBANKMENT AND OUTLET AREA.
2. REMOVE STONES AND ROCKS WHOSE DIAMETER IS GREATER THAN THREE (3) INCHES AND OTHER DEBRIS.
3. EXCAVATE WET STORAGE AND CONSTRUCT THE EMBANKMENT AND/OR OUTLET AS NEEDED TO ATTAIN THE NECESSARY STORAGE REQUIREMENTS.
4. USE ONLY FILL MATERIAL FOR THE EMBANKMENT THAT IS FREE FROM EXCESSIVE ORGANICS, DEBRIS, LARGE ROCKS (OVER SIX (6) INCHES) OR OTHER UNSUITABLE MATERIALS. COMPACT THE EMBANKMENT IN 9–INCH LAYERS BY TRAVERSING WITH EQUIPMENT WHILE IT IS BEING CONSTRUCTED
5. STABILIZE THE EARTHEN EMBANKMENT USING ANY OF THE FOLLOWING MEASURES: SEEDING FOR TEMPORARY VEGETATION COVER; SEEDING FOR PERMANENT VEGETATIVE COVER; OR SLOPE PROTECTION, IMMEDIATELY AFTER INSTALLATION

Notes:

TEMPORARY EROSION CONTROL BLANKETS TO HANDLE MINIMUM VELOCITY OF 5 FPS. CONTRACTOR TO PROVIDE SHOP DRAWINGS TO DESIGN ENGINEER. EROSION CONTROL BLANKET TO BE BY NORTH AMERICAN GREEN OR APPROVED EQUAL IS TO BE USED.

1. CONTRACTOR SHALL FIELD ADJUST TEMPORARY SWALE(S) AS NECESSARY, AND ENSURE PROPER FLOW TO THE APPROPRIATE DISCHARGE LOCATION.
2. CHECK DAMNS TO BE ADDED TO ALL TEMPORARY SESC SWALES. CHECK DAMNS ARE TO BE AT 6' SPACING FOR SLOPES GREATER THAN 6% AND AT 10' SPACING FOR SLOPES LESS THAN 6%.

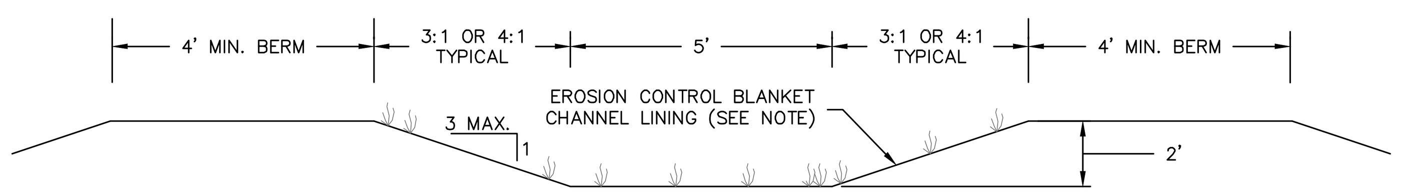

Temporary SESC Swale Cross Section

NOT TO SCALE

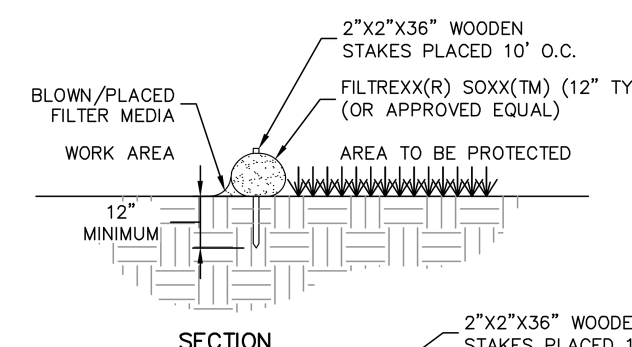

NOTES:

1. ALL MATERIAL TO MEET FILTREXX(R) SPECIFICATIONS
2. FILTER MEDIA(TM) FILL TO MEET APPLICATION REQUIREMENTS.
3. COMPOST MATERIAL TO BE DISPERSED ON SITE, AS DETERMINED BY ENGINEER
4. STAKES ARE NOT TO BE USED IN PAVEMENT AREAS.
5. SELF WEIGHT OF FILTREXX SYSTEM IS ADEQUATE TO PREVENT SYSTEM MOVEMENT ONCE POSITIONED ALONG AREA SHOWN ON THE PLANS.
6. CONTRACTOR TO PLACE FILTREXX SEDIMENT CONTROL OR APPROVED EQUAL AROUND ALL CURB INLET LOCATIONS AS SPECIFIED ON PLANS.

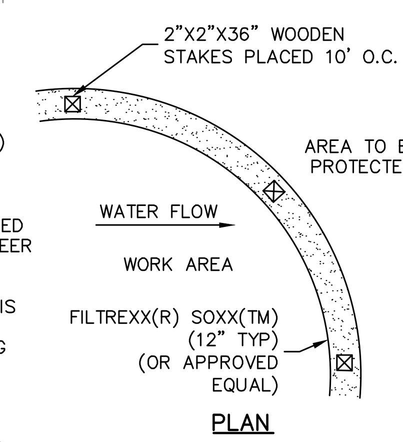

Filtrexx Sediment Control (or Approved Equal)

NOT TO SCALE

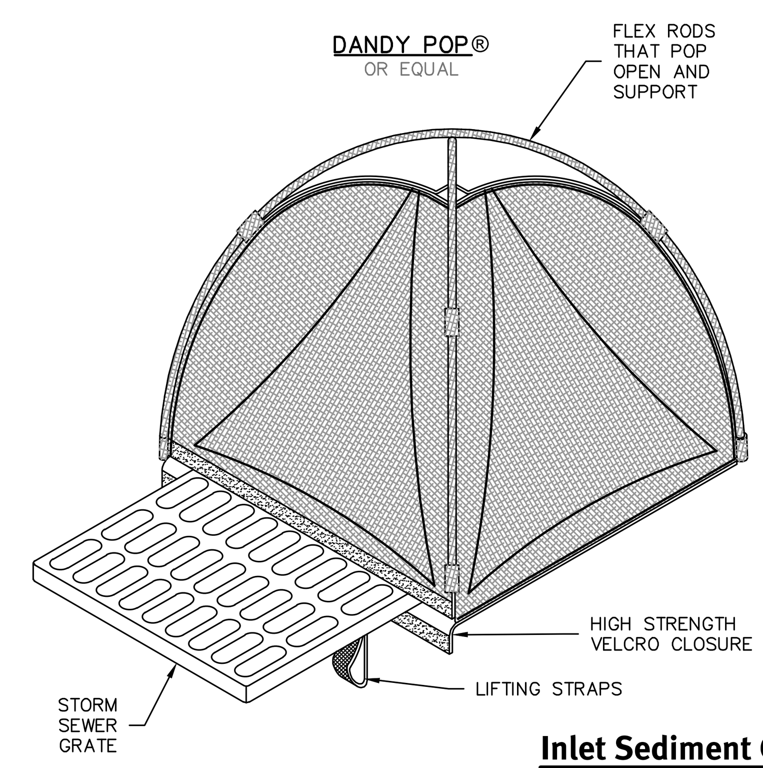

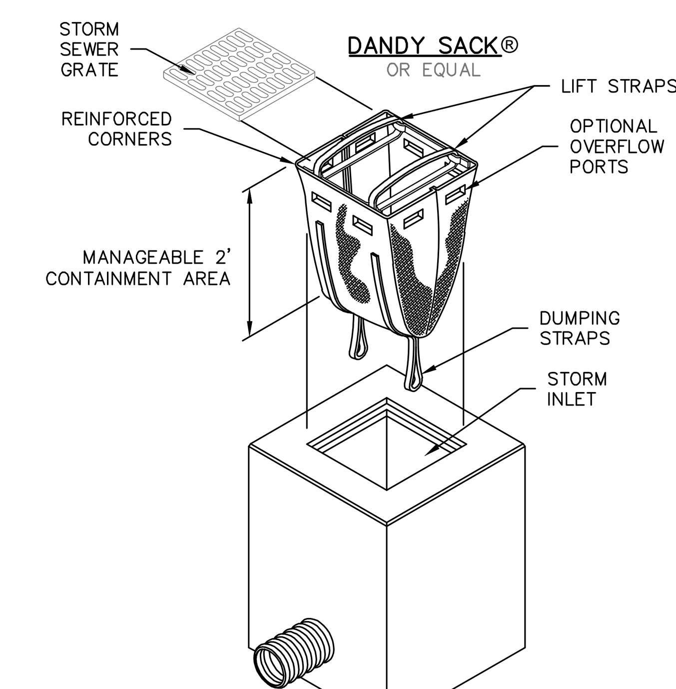

Inlet Sediment Control Devices

NOT TO SCALE

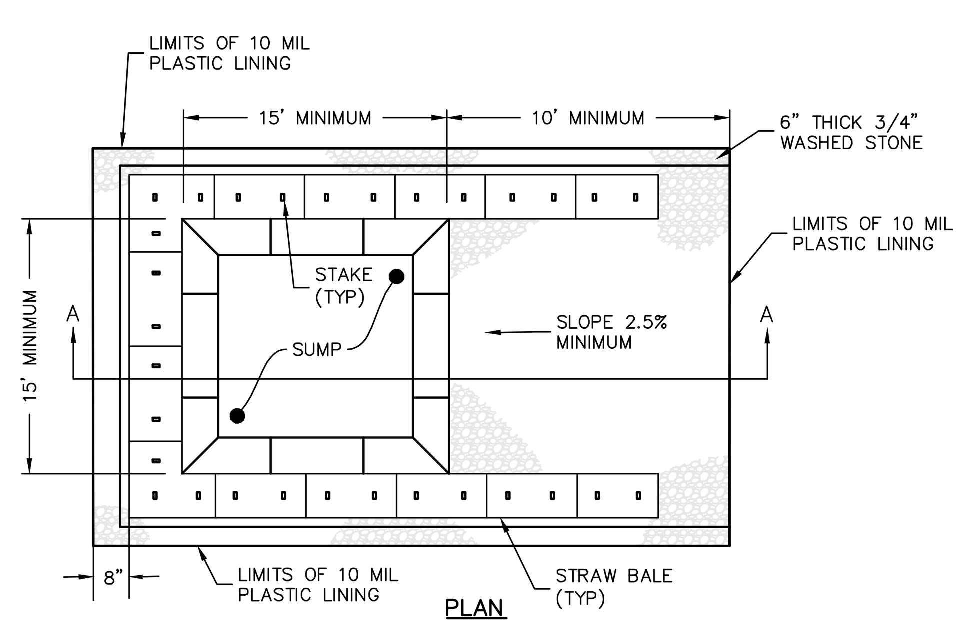

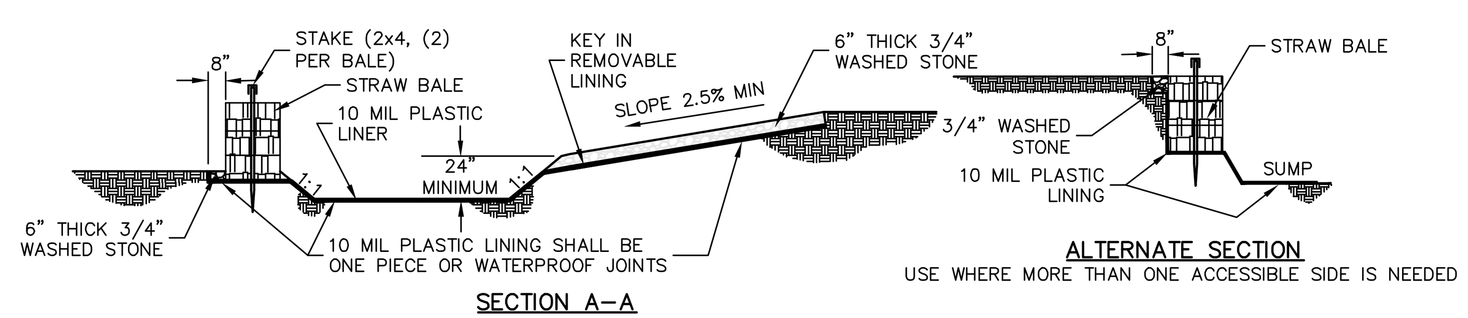

WASHOUT SIGN

NOTES:

1. PIT IS SPECIFICALLY DESIGNATED, DIKED AND IMPERVIOUS CONTAINMENT TO PREVENT CONTACT BETWEEN CONCRETE WASH AND STORMWATER.
2. WASH WATER SHALL NOT BE ALLOWED TO FLOW TO SURFACE WATER.
3. FACILITY MUST HOLD SUFFICIENT VOLUME TO CONTAIN CONCRETE WASTE WITH A MINIMUM FREEBOARD OF 12."
4. FACILITY SHALL NOT BE FILLED BEYOND 95% CAPACITY UNLESS A NEW FACILITY IS CONSTRUCTED.
5. SAWCUT PORTLAND CEMENT CONCRETE, RESIDUE FROM SAWCUT AND GRINDING TO BE DISPOSED OF IN THE PIT.
6. CONCRETE WASHOUTS SHALL BE LOCATED A MINIMUM OF 100' FROM DRAINAGE WAYS, INLETS, AND SURFACE WATERS.
7. MANUFACTURED CONCRETE WASHOUT DEVICES MAY BE USED IF REMOVED FROM THE SITE WHEN 95% FULL CAPACITY.

Concrete Washout Area

NOT TO SCALE

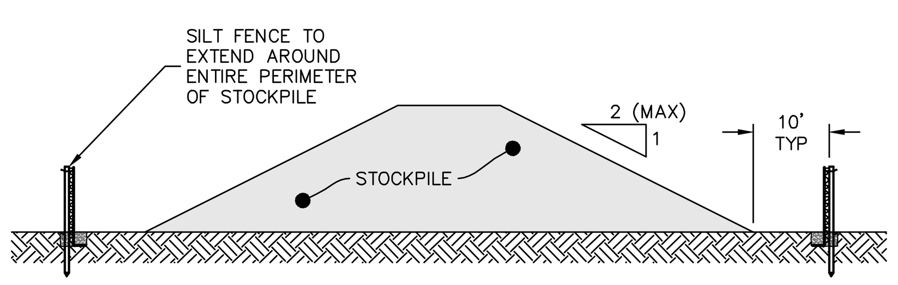

NOTES:

1. ALL STOCKPILES MUST BE INSTALLED AND MAINTAINED IN ACCORDANCE WITH SECTION 3 "STOCKPILE AND STAGING AREA MANAGEMENT" OF THE RHODE ISLAND SOIL EROSION AND SEDIMENT CONTROL HAND BOOK (CURRENT EDITION).
2. DIVERT ALL STORMWATER AWAY FROM STOCKPILES.
3. SOIL STOCKPILES THAT ARE NOT TO BE USED WITHIN 30 DAYS MUST BE SEEDED AND MULCHED IMMEDIATELY AFTER FORMATION OF THE STOCKPILE WITH SEED MIX COMPATIBLE WITH THE SOIL TYPE.
4. STOCKPILE AND SILT FENCE MUST BE INSPECTED AT LEAST ONCE PER WEEK AND AFTER RAIN EVENTS IN EXCESS OF ½" OF RAINFALL. REPAIR/ REPLACE SILT FENCE (AND STOCKPILE COVERS WHERE APPLICABLE) AS NEEDED TO KEEP THEM FUNCTIONING ADEQUATELY.
5. SEDIMENT TRAPPED BY SILT FENCES MUST BE REMOVED AND PROPERLY DISPOSED OF WHENEVER SIGNIFICANT ACCUMULATION OCCURS.

Stockpile Protection

NOT TO SCALE

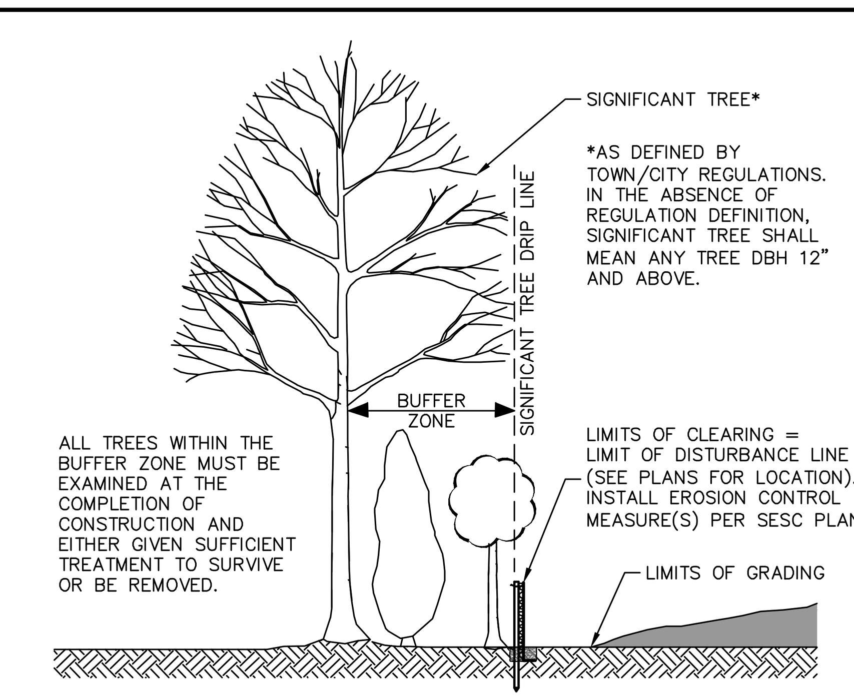

NOTE: LIMIT OF DISTURBANCE (LOD) MUST BE STAKED OUT PRIOR TO CONSTRUCTION. IF ANY SIGNIFICANT TREE DRIP LINE IS ENCROACHING PAST THE LOD, CONTRACTOR MUST CONTACT SITE ENGINEER PRIOR TO CONSTRUCTION.

Limit of Disturbance at Vegetation

NOT TO SCALE

DiPrete Engineering
Two Stafford Court Cranston, RI 02920
tel 401-943-1000 fax 401-464-6006 www.diprete-eng.com
Boston • Providence • Newport

BRIAN C. GIROUX
No. 9341
REGISTERED PROFESSIONAL ENGINEER CIVIL
01/07/2020

This plan set must not be used for construction purposes unless stamped 'Issued for Construction' and stamped by a registered Professional Engineer of DiPrete Engineering.

DiPrete Engineering only warrants plans on a DiPrete Engineering title block stamped by registered Professional Engineer of DiPrete Engineering. DiPrete Engineering does not warrant plans by any other party.

The contractor is responsible for all of the means, methods, safety precautions and requirements, and OSHA conformance in the implementation of this plan and design.

Existing utilities shown on this plan are approximate only. DiPrete Engineering assumes no responsibility for damages incurred due to locations of existing utilities. See 'Utility Note' on sheet 3.

No.	Date	Description	By:
9	07/07/2020	Crossman Peer Review Comment Revisions	J.L.S.
8	6/26/2020	Crossman Peer Review Comment Revisions	B.C.G.
7	06/23/2020	Crossman Peer Review Comment Revisions	J.L.S.
6	06/18/2020	Crossman Peer Review Comment Revisions	J.L.S.
5	06/04/2020	Crossman Peer Review Comment Revisions	J.L.S.
4	05/21/2020	Crossman Peer Review Comment Revisions	J.L.S.
3	05/01/2020	Updated Abutters	K.M.R
2	04/24/2020	Crossman Peer Review Comment Revisions	J.L.S.
1	03/31/2020	RIDEM/Development Plan Review Modifications	N.D.K.
0	01/27/2020	RIDEM Preliminary Determination Submission	J.L.S.

Drawn By: J.L.S. Checked By: D.R.N.

Detail Sheet - 1
Frontier Road Solar
Assessor's Plat 7 Lots 62, 62A & 63
Hopkinton, Rhode Island

Prepared For
Revity Energy, LLC
117 Metro Center Blvd, Warwick, Rhode Island 02886

DE Job No: 2437-021 Copyright 2020 by DiPrete Engineering Associates, Inc.

z:\demain\projects\2437-021 frontier road solar\autocad drawings\2437-021-cvar.dwg Plotted: 7/7/2020

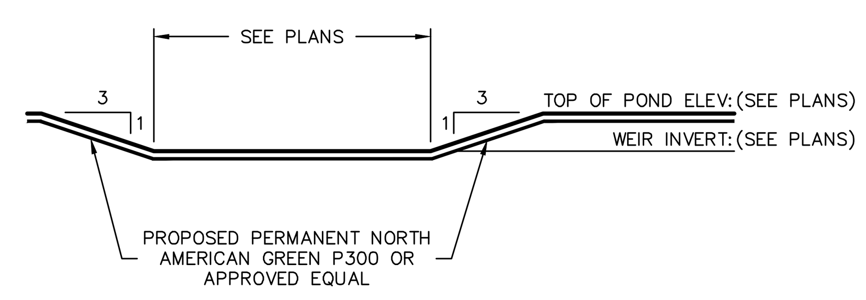

Overflow Weir

NOT TO SCALE

NOTES:
1. LIMITS OF INFILTRATION POND TO BE STAKED OUT AND NOT USED AS A TEMPORARY SEDIMENT BASIN DURING CONSTRUCTION (NO CONSTRUCTION TRAFFIC ALLOWED WITHIN POND LIMITS)
2. PONDS A,B,C,D,F ARE TO SLIGHTLY MODIFIED EXISTING PONDS / NATURAL DEPRESSIONS (SEE PLANS)

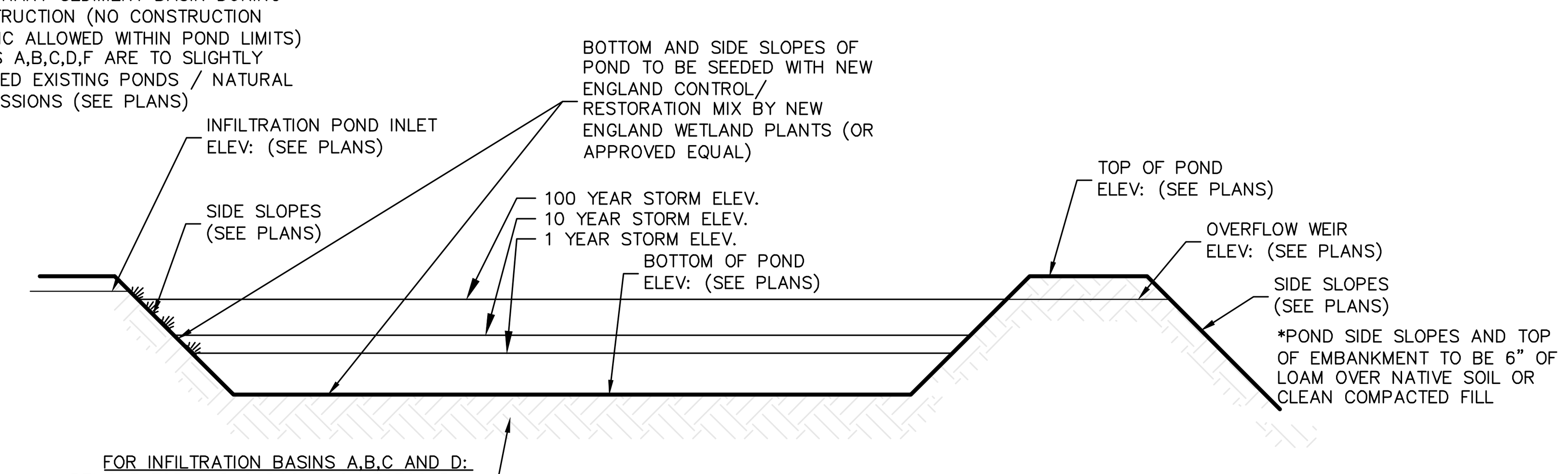

Infiltration / Detention Pond

NOT TO SCALE

DESCRIPTION	IP–A	IP–B	IP–C	IP–D	DP–E	DP–F
TOP OF POND ELEVATION	153.00	212.00	146.00	198.00	164.00	135.00
100 YEAR STORM ELEVATION	152.38	211.38	145.15	196.84	163.02	134.07
10 YEAR STORM ELEVATION	151.31	210.62	142.83	195.01	161.81	133.42
1 YEAR STORM ELEVATION	150.22	210.09	141.66	194.21	160.98	132.72
BOTTOM OF POND ELEVATION	150.00	210.00	141.50	194.00	160.00	132.00
SEASONAL HIGH GWT ELEVATION	146.50	205.00	139.50	189.00	N/A**	N/A**
SOIL EVALUATION	20–3	20–9	20–1	20–12	N/A**	N/A**

**NO TEST HOLE AVAILABLE FOR POND E AND F. DETENTION POND E AND F ARE DESIGNED AT EXISTING GRADE

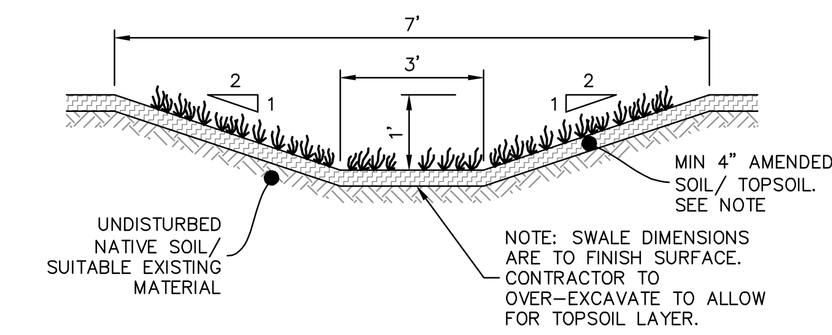

Grass Swale (Wide Bottom) Cross Section

NOT TO SCALE

INTERNAL ORIFICE SCHEDULE	
LOCATION	DIAMETER
POND A	2.00"
POND C	4.00"
POND D	6.00"*
POND E	3.00"
POND F	2.50"

*FOR 6" ORIFICE OMIT THE TWO PVC PIPE PLUGS AND OMIT THE DRILLED ORIFICE

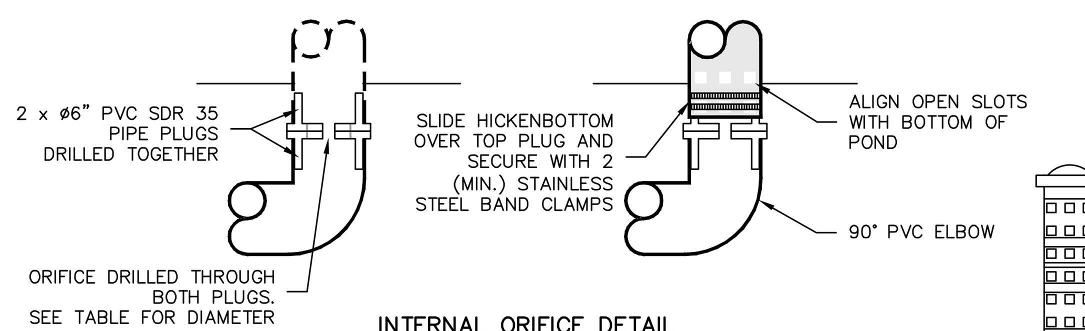

INTERNAL ORIFICE DETAIL

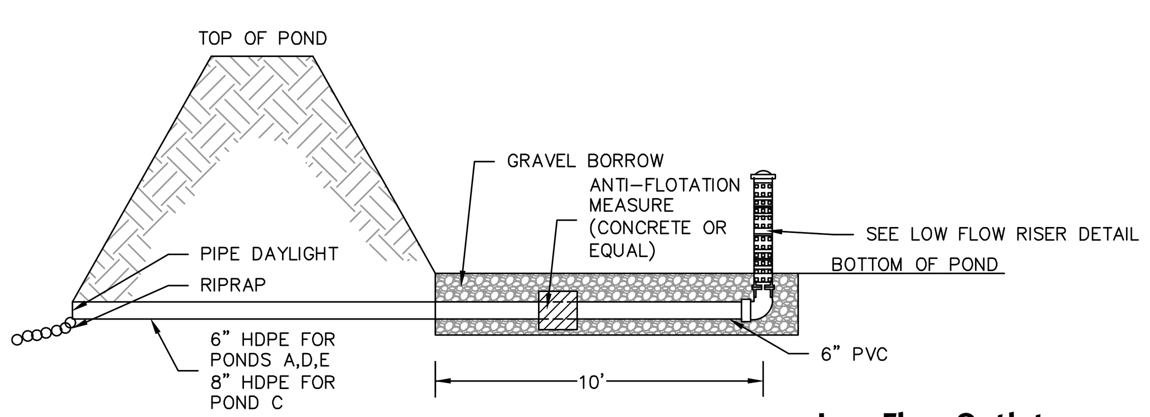

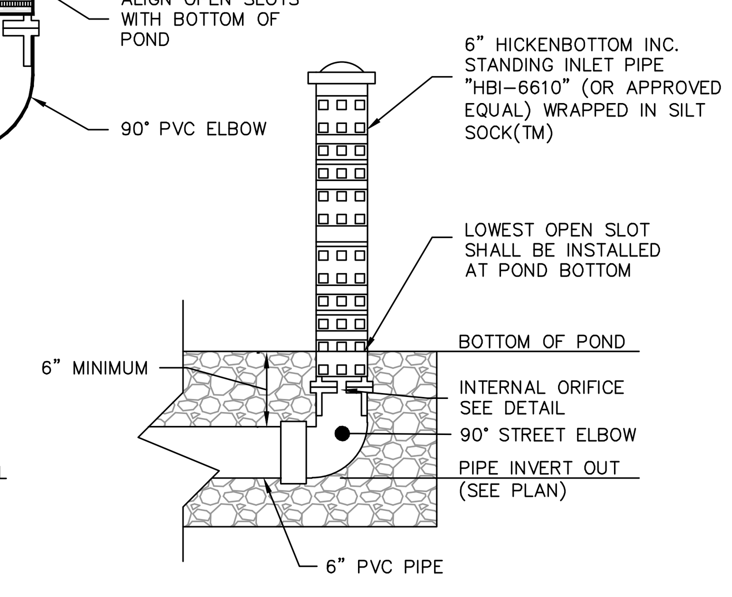

LOW FLOW RISER DETAIL

Low Flow Outlet

NOT TO SCALE

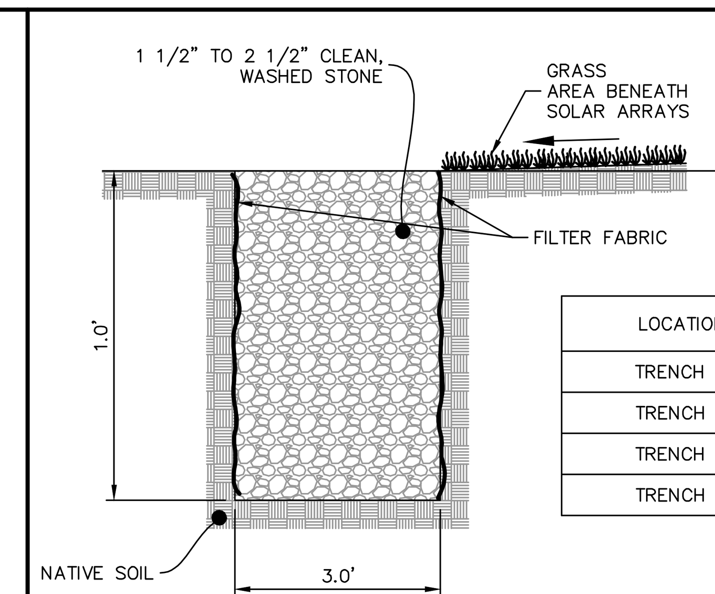

LOCATION	LENGTH
TRENCH A	440'
TRENCH B	575'
TRENCH C	555'
TRENCH D	575'

Stone Trench

NOT TO SCALE

NOTES:
1. CONTRACTOR SHALL LEAVE AN 8–INCH GAP UNDER THE FENCE TO ALLOW FOR PASSAGE OF SMALL ANIMALS.
2. PERMANENT COLORED FLAGGING SHALL BE ATTACHED TO THE FENCE TO DETER DEER COLLISIONS.

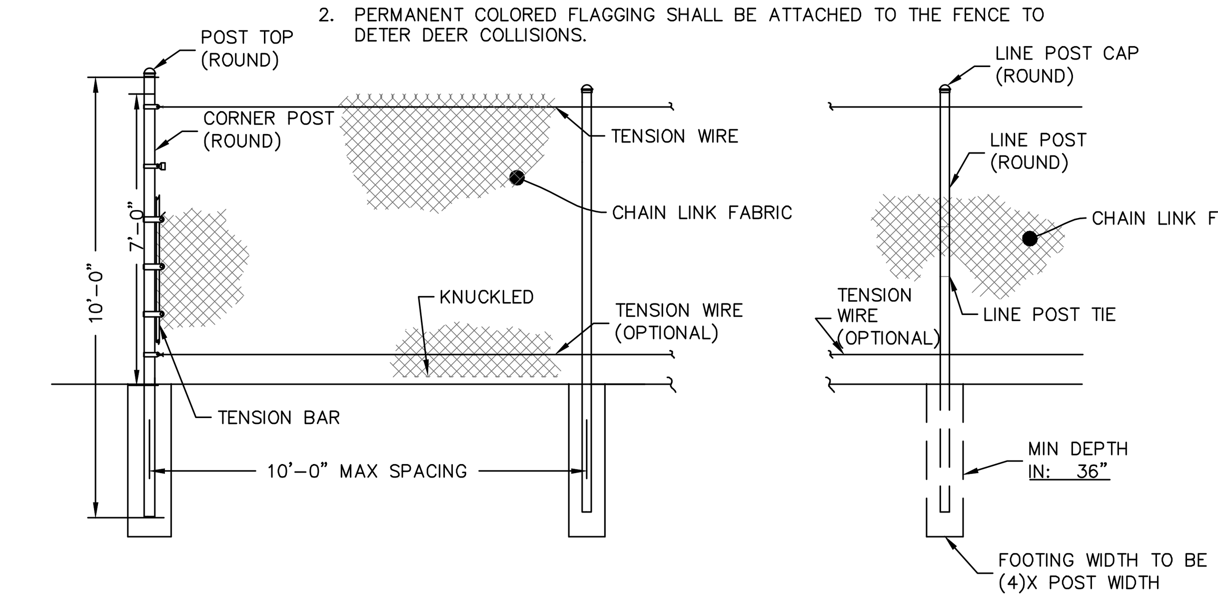

Typical Fence Detail

NOT TO SCALE

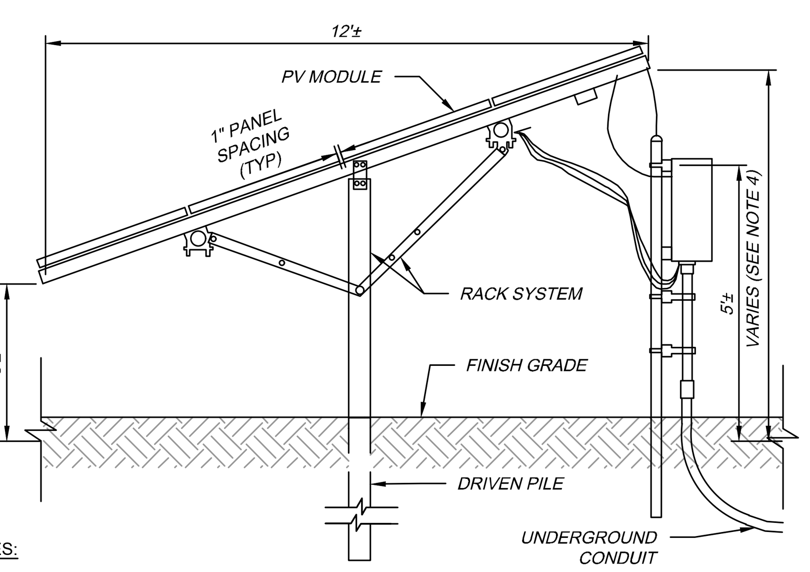

NOTES:
1. ADJACENT PANELS TABLES SHALL BE INSTALLED WITH A MINIMUM OF 6 INCHES OF SEPARATION.
2. ROWS OF PANELS TABLES SHALL BE INSTALLED WITH A MINIMUM OF 13 FEET OF SEPARATION.
3. TYPICAL SOLAR PANEL RACKING SYSTEM SHOWN. SELECTED RACKING SYSTEM SHALL BE INSTALLED IN ACCORDANCE WITH MANUFACTURERS' INSTRUCTIONS.
4. INSTALLED HEIGHT WILL VARY BASED ON THE RACKING LAYOUT AND FINAL DESIGN BUT WILL BE LESS THAN 12' PER ZONING CODE REQUIREMENTS. PANEL HEIGHT IN AREAS OVER PROPOSED PONDS WILL BE INSTALLED SO THE PANEL BOTTOM IS SET A MINIMUM AT THE TOP OF POND ELEVATION WITHIN THE POND LIMITS.
5. SEE PLANS FOR PANEL TYPE, QUANTITY AND LOCATIONS.

Solar Panel Racking

NOT TO SCALE

NOTES:
1. ALL PIPE AND FITTINGS SHALL BE HDPE PIPE FOR DRAINAGE.
2. PIPE BEDDING AND BACKFILL FOR CLEANOUTS SHALL MEET APPLICABLE DRAINAGE AND SEWER SPECIFICATIONS UNLESS OTHERWISE NOTED BY ENGINEER.
3. FOR SEWER CLEANOUTS, A MINIMUM OF ONE CLEANOUT SHALL BE PLACED ON EACH LATERAL, 5' FROM THE STRUCTURE. FOR LONGER RUNS, CLEANOUTS SHALL BE LOCATED EVERY 100'. FOR DRAIN CLEANOUTS SEE PLANS FOR LOCATION AS REQUIRED.
4. ALL CLEANOUTS SHALL BE SLEEVED WITH A CAST–IRON BOX SET FLUSH WITHIN THE FINAL GRADE OF GRASS, HARDSCAPE, ROADWAYS OR CONCRETE AREAS. CAST IRON BOX NOT REQUIRED FOR STORMWATER BMP AREAS. COVERS SHALL BE INSCRIBED WITH THE WORD "SEWER." OR "DRAIN" ACCORDINGLY. FOR ROADWAY APPLICATIONS, THE CAST–IRON BOX MUST MEET H–20 LOADING.

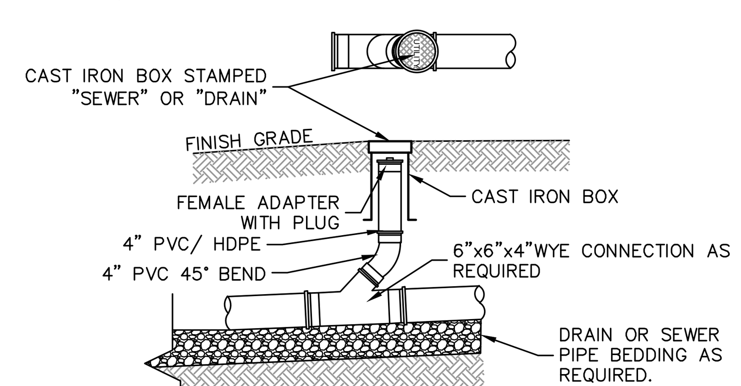

Cleanout

NOT TO SCALE

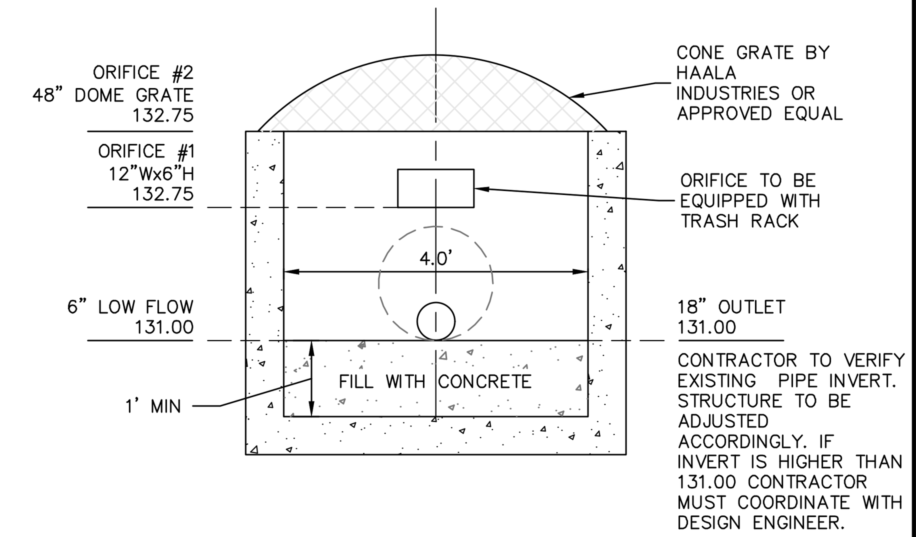

Outlet Control Structure
4' Diameter Manhole Pond F

SCALE: 1"=2'

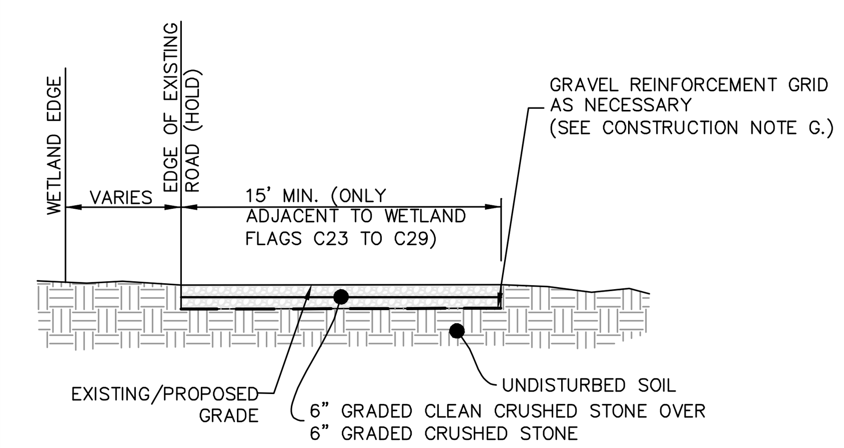

EXISTING ACCESS RECONSTRUCTION TYPICAL

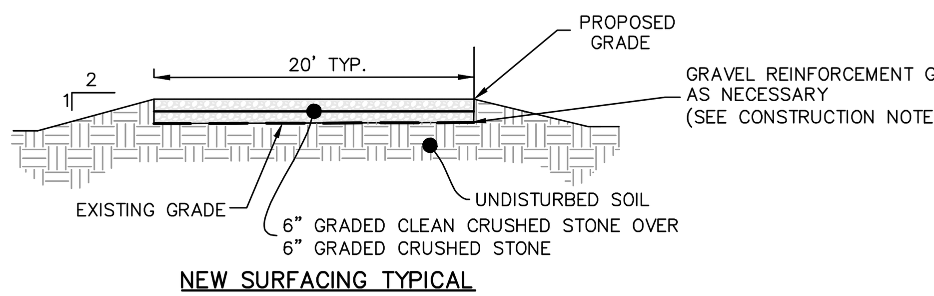

NEW SURFACING TYPICAL

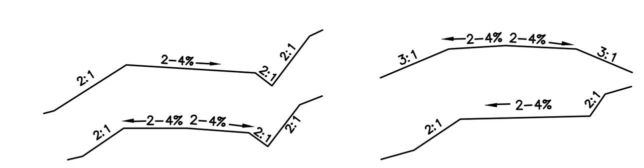

PROFILE TYPICAL

MATERIALS SPECIFICATIONS	
SIEVE DESIGNATION	PERCENTAGE BY MASS (WEIGHT) PASSING SQUARE MESH SIEVES
90mm (3.5in)	100
75mm (3in)	90–100
50mm (2in)	75–100
25mm (1in)	50–80
12.5mm (0.5in)	30–60
4.75mm (No.4)	15–40
7.5um (No. 200)	0–6

DENSE GRADED CRUSHED STONE FOR SUBBASE:

A. DENSE GRADED CRUSHED STONE FOR SUBBASE SHALL CONSIST OF CLEAN, HARD, UNIFORMLY GRADED, CRUSHED STONE. IT SHALL BE SUFFICIENTLY FREE FROM DIRT, DELETERIOUS MATERIAL, AND PIECES THAT ARE STRUCTURALLY WEAK AND SHALL MEET THE FOLLOWING REQUIREMENTS:

B. SOURCE OF MATERIAL SHALL BE OBTAINED FROM AREAS STRIPPED AND CLEANED OF SOIL AND DEBRIS

C. MATERIAL COARSER THAN THE 4.75mm (No. 4) SIEVE SHALL NOT BE MORE THAN 30 PERCENT, BY MASS (WEIGHT), OF THIN AND/OR ELONGATED PIECES.

MATERIALS SPECIFICATIONS	
SIEVE DESIGNATION	PERCENTAGE BY MASS (WEIGHT) PASSING SQUARE MESH SIEVES
90mm (3.5in)	100
75mm (3in)	90–100
50mm (2in)	75–100
25mm (1in)	50–80
12.5mm (0.5in)	30–60
4.75mm (No.4)	0–40
7.5um (No. 200)	0

DENSE GRADED CLEAN CRUSHED STONE FOR SUBBASE:

A. DENSE GRADED CLEAN CRUSHED STONE FOR SUBBASE SHALL CONSIST OF CLEAN, WASHED, HARD, UNIFORMLY GRADED, CRUSHED STONE. IT SHALL BE SUFFICIENTLY FREE FROM DIRT, DELETERIOUS MATERIAL, AND PIECES THAT ARE STRUCTURALLY WEAK AND SHALL MEET THE FOLLOWING REQUIREMENTS:

B. SOURCE OF MATERIAL SHALL BE OBTAINED FROM AREAS STRIPPED AND CLEANED OF SOIL AND DEBRIS

C. MATERIAL COARSER THAN THE 4.75mm (No. 4) SIEVE SHALL NOT BE MORE THAN 30 PERCENT, BY MASS (WEIGHT), OF THIN AND/OR ELONGATED PIECES.

SURFACING SPECIFICATIONS			
CONDITIONS:	ROAD THICKNESS	STONE SIZE	FINES
BASE LAYER WITH GEOTEXTILE FABRIC (NOT EXCESSIVELY WET)	4" MIN.	3–3 1/2	0–6%
BASE LAYER WITH GEOTEXTILE FABRICS (WET CONDTIONS)	6" MIN.	3–3 1/2	0–6%

CONSTRUCTION NOTE:

A. CONSTRUCTION OPERATIONS SHALL BE CARRIED OUT IN SUCH A MANNER TO MINIMIZE POTENTIAL EROSION AND WATER QUALITY DEGRADATION.

B. FIXED EROSION CONTROLS AND SITE STABILIZATION SHALL BE CONDUCTED IN ACCORDANCE WITH APPROVED BMP'S OR PURSUANT TO PROJECT SPECIFIC PERMITS.

C. TREES, STUMPS, ROOTS, BRUSH AND WEEDS SHALL BE REMOVED FROM THE WORK AREA IF DETERMINED NECESSARY TO SAFELY CONSTRUCT ROADWAY.

D. ON WEAK BEARING SOIL SUCH AS LOOSE ALLUVIAL, OR WETLAND SOILS, SURFACE TREATMENTS SHOULD BE UNDERLAIN WITH WOVEN GEOTEXTILES.

E. AT MINIMUM, ROADSIDE DITCHES SHALL BE 1FT BELOW ROAD SURFACE.

F. DISCHARGE POINTS. FOR DITCHES SHALL NOT BE NEAR WETLANDS OR STREAMS, AND OR BE LOCATED AT THE DIRECTION OF THE DESIGN ENGINEER.

G. CONTRACTOR TO INSTALL GRAVEL REINFORCEMENT GRID AS NECESSARY TO PREVENT EROSION AND/OR VEHICULAR DAMAGE TO THE ACCESS ROAD.

Crushed Stone Access Drive Detail

NOT TO SCALE

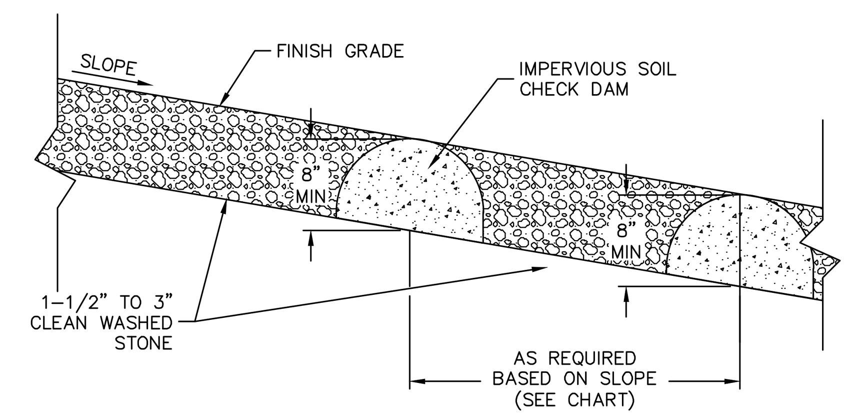

DAM LOCATION CHART	
SLOPE	DISTANCE BETWEEN DAMS
1%	100'
2%	50'
3%	33.3'
4%	25'
5%	20'

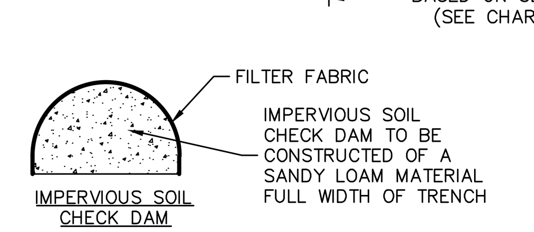

IMPERVIOUS SOIL CHECK DAM

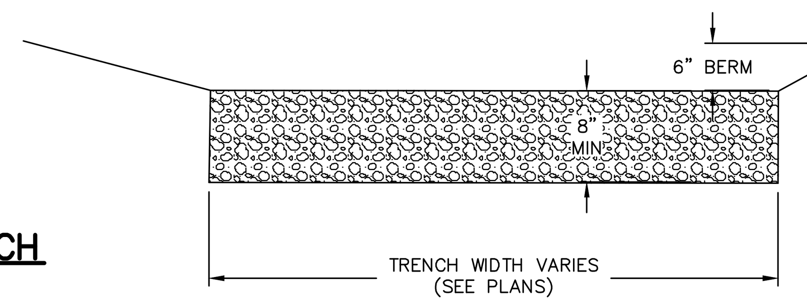

IMPERVIOUS SOIL DAM/ STONE TRENCH CROSS SECTION

NOT TO SCALE

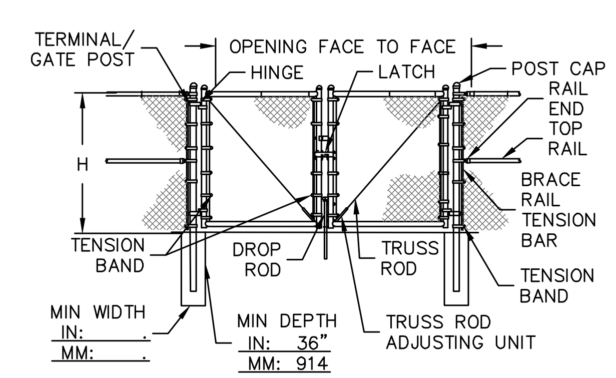

NOTE:
1. METRIC DIMENSIONS ARE NOMINAL EQUIVALENTS TO U.S. DIMENSIONS.
2. SPECIFICATIONS SHOWN CAN BE CHANGED BY THE MANUFACTURER ONLY.
3. FOOTING WIDTH TO BE (4)X POST WIDTH.

DOUBLE SWING GATE 12' OPENING

NOT TO SCALE

DiPrete Engineering
Two Stafford Court Cranston, RI 02920
tel 401-943-1000 fax 401-464-6006 www.diprete-eng.com
Boston • Providence • Newport

BRIAN C. GIROUX
STATE OF RHODE ISLAND
No. 9341
07/07/2020
REGISTERED PROFESSIONAL ENGINEER CIVIL

This plan set must not be used for construction purposes unless stamped 'Issued for Construction' and stamped by a registered Professional Engineer of DiPrete Engineering.

DiPrete Engineering only warrants plans on a DiPrete Engineering title block stamped by registered Professional Engineer of DiPrete Engineering. DiPrete Engineering does not warrant plans by any other party.

The contractor is responsible for all of the means, methods, safety precautions and requirements, and OSHA conformance in the implementation of this plan and design.

Existing utilities shown on this plan are approximate only. DiPrete Engineering assumes no responsibility for damages incurred due to locations of existing utilities. See 'Utility Note' on sheet 3.

No.	Date	Description	By:
9	07/07/2020	Crossman Peer Review Comment Revisions	J.L.S.
8	6/26/2020	Crossman Peer Review Comment Revisions	B.C.G.
7	06/23/2020	Crossman Peer Review Comment Revisions	J.L.S.
6	06/18/2020	Crossman Peer Review Comment Revisions	J.L.S.
5	06/04/2020	Crossman Peer Review Comment Revisions	J.L.S.
4	05/21/2020	Crossman Peer Review Comment Revisions	J.L.S.
3	05/01/2020	Updated Abutters	K.M.R
2	04/24/2020	Crossman Peer Review Comment Revisions	J.L.S.
1	03/31/2020	RIDEM/Development Plan Review Modifications	N.D.K.
0	01/27/2020	RIDEM Preliminary Determination Submission	J.L.S.

Drawn By: J.L.S. Checked By: D.R.N.

Detail Sheet - 2

Frontier Road Solar

Assessor's Plat 7 Lots 62, 62A & 63
Hopkinton, Rhode Island

Prepared For
Revity Energy, LLC
117 Metro Center Blvd, Warwick, Rhode Island 02886

DE Job No: 2437-021 Copyright 2020 by DiPrete Engineering Associates, Inc.

z:\demain\projects\2437-021 frontier road solar\autocad drawings\2437-021-cvar.dwg Plotted: 7/7/2020